GROUP 35B

ANTI-LOCK BRAKING SYSTEM (ABS)

CONTENTS

GENERAL DESCRIPTION

M1352000100238

The ABS consists of components such as the wheel speed sensors, stoplight switch, hydraulic unit assembly (integrated with ABS-ECU), ABS rotor, and the ABS warning light. If a problem occurs in the system, the malfunctioning components can be identified and the trouble symptoms will be memorized by the diagnostic function.
In addition, reading of diagnostic trouble codes and data list and actuator testing are possible by using the Scan Tool.

If the ABS hydraulic unit is faulty, the ABS-ECU must be replaced.
The ABS-ECU runs a self-check for 3 seconds upon start-up (also ignition switch ON, engine stopped). The ABS warning light, TCL warning light, and TCL indicator light should be illuminated during the self-check and turn off when the self-check completes.

ITEMS	SPECIFICATIONS
ABS type	4-sensor, 3-channel type
Speed sensor	Magnet coil type on 4-wheels
Front ABS rotor teeth	43
Rear ABS rotor teeth	43

CONSTRUCTION DIAGRAM

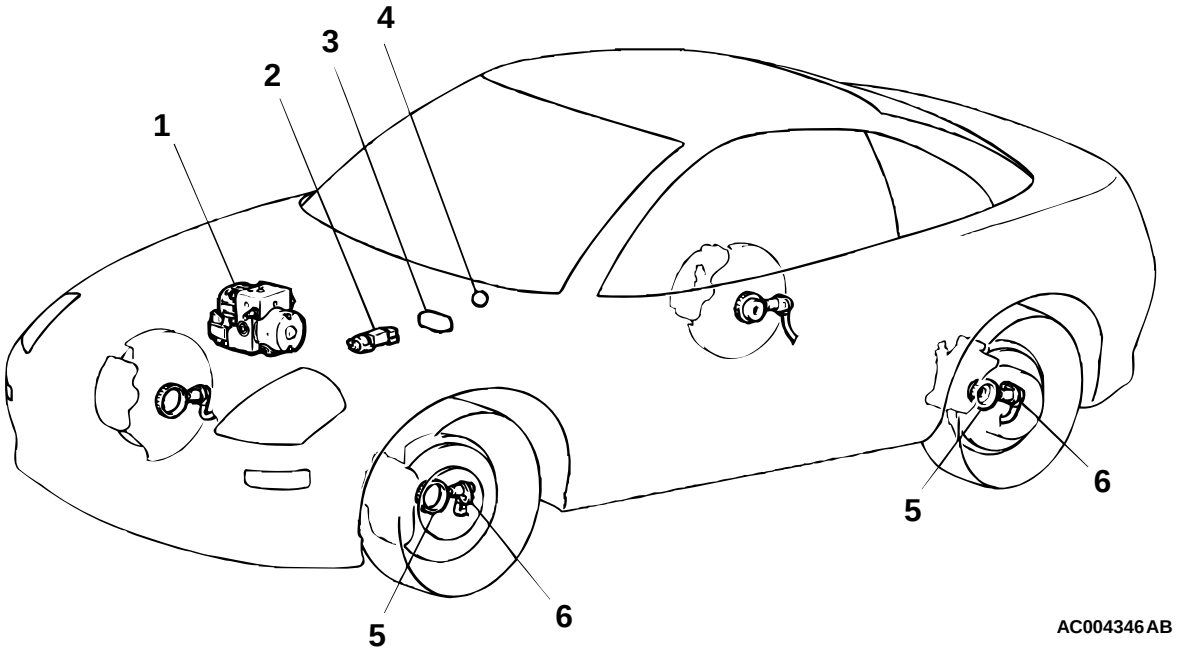

1. HYDRAULIC UNIT (INTEGRATED WITH ABS-ECU)
2. STOPLIGHT SWITCH
3. DATA LINK CONNECTOR
4. ABS WARNING LIGHT
5. ABS ROTOR
6. WHEEL SPEED SENSOR

System Check Sound
When starting the engine, a thudding sound can sometimes be heard coming from the engine compartment. This is a normal sound during the ABS self-check.

ABS Operation Sounds and Sensations
During normal operation, the ABS makes several sounds that may seem unusual at first:

- A whining sound is caused by the ABS hydraulic unit motor.
- When pressure is applied to the brake pedal, the pulsation of the pedal causes a scraping sound.
- When the brakes are applied firmly, the ABS operates, rapidly applying and releasing the brakes many times per second. This repeated application and release of braking forces can cause the suspension to make a thumping sound and the tires to squeak.

Long Stopping Distances on Loose Road Surfaces
When braking on loose surfaces like snow-covered or gravel roads, the stopping distance can be longer for an ABS-equipped vehicle than the stopping distance for a vehicle with a conventional brake system.

Shock at starting check
Shock may be felt when the brake pedal is lightly pressed while driving at a low speed. This is a normal characteristic because the ABS system operation check is carried out when vehicle speed is 8 km/h (5 mph) or less.

ANTI-LOCK BRAKING SYSTEM (ABS) DIAGNOSIS

INTRODUCTION TO ANTI-LOCK BRAKE SYSTEM DIAGNOSIS

M1352012500233

The anti-lock brake system (ABS) operates differently from conventional brake systems. These differences include sounds, sensations, and vehicle performance that owners and service technicians who are not familiar with ABS may not be used to. Some operational characteristics may seem to be malfunctions, but they are simply signs of normal ABS operation. When diagnosing the ABS system, keep these operational characteristics in mind. Inform the owner of the kind of performance characteristics to expect from an ABS-equipped vehicle.

ABS Diagnostic Trouble Code Detection Conditions

ABS diagnostic trouble codes (ABS DTCs) are set under different conditions, depending on the malfunction detected. Most ABS DTCs will only be set during vehicle operation. Some ABS DTCs will also be set during the ABS self-check immediately after the engine is started.
When you check if an ABS DTC will be displayed again after the DTC has been erased, you should duplicate the ABS DTC set conditions. Depending on the detection timing and set conditions for the specific ABS DTC, you must either drive the vehicle or turn the engine off and restart it. To set the proper conditions for that DTC again, refer to "ABS DTC SET CONDITIONS" for each ABS DTC that you are trying to reset.

ABS DIAGNOSTIC TROUBLESHOOTING STRATEGY

M1352011100265

Use these steps to plan your diagnostic strategy. If you follow them carefully, you will be sure that you have exhausted most of the possible ways to find an ABS fault.

1. Gather information about the problem from the customer.
2. Verify that the condition described by the customer exists.
3. Check the vehicle for any ABS DTC.
4. If you cannot verify the condition and there are no ABS DTCs, the malfunction is intermittent. Refer to GROUP 00, How to use Troubleshooting/Inspection Service Points – How to Cope with Intermittent Malfunctions P.00-6.

5. If you can verify the condition but there are no ABS DTCs, or the system cannot communicate with the scan tool, check that the basic brake system is operating properly.
   - If the basic brake system is not operating properly, refer to the GROUP 35A, Basic Brake System Diagnosis P.35A-4.
   - If the basic brake system is operating properly, refer to P.35B-26.
6. If there is an ABS DTC, record the number of the DTC, then erase the DTC from the memory using the scan tool.
7. Recreate the ABS DTC set conditions to see if the same ABS DTC will set again.
   - If the same ABS DTC sets again, perform the diagnostic procedures for the DTC. Refer to P.35B-7.
   - If you cannot get the same ABS DTC to set again, the malfunction is intermittent. Refer to GROUP 00, How to use Troubleshooting/Inspection Service Points – How to Cope with Intermittent Malfunctions P.00-6.

ABS TROUBLE CODE DIAGNOSIS

M1352011200273

Retrieving ABS Diagnostic Trouble Codes

Using Scan Tool MB991502

Required Special Tool:
- MB991502: Scan Tool (MUT-II)

⚠ CAUTION

To prevent damage to scan tool MB991502, always turn the ignition switch to the "LOOK" (OFF) position before connecting or disconnecting the scan tool MB991502.

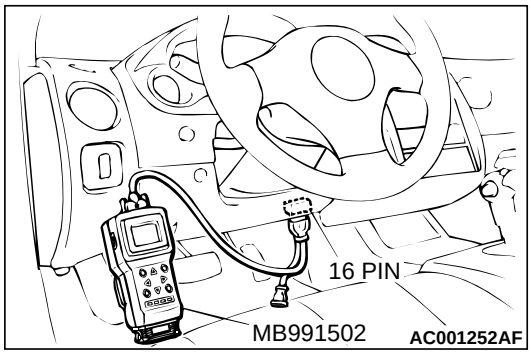

1. Connect scan tool MB991502 to the data link connector.
2. Turn the ignition switch to the "ON" position.
3. Use scan tool MB991502 to check for ABS diagnostic trouble codes.
4. Turn the ignition switch to the "LOOK" (OFF) position.
5. Disconnect scan tool MB991502.

Using the ABS Warning Light and Special Tool MB991529

Required Special Tool:
- MB991529: Diagnostic Trouble Code Check Harness

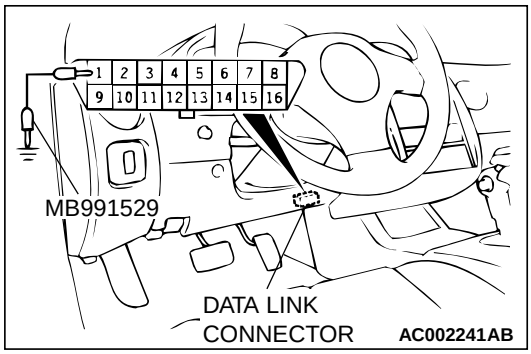

1. Use special tool MB991529 to ground number 1 terminal of the data link connector.

⚠ CAUTION

Do not depress the brake pedal after the ignition switch is turned to the "ON" position. If the brake pedal is depressed while the ABS is inoperative and the ignition switch is "ON," the ABS warning light will remain on. Because of this, diagnostic trouble codes will not be read out.

2. Turn the ignition switch to the "ON" position.

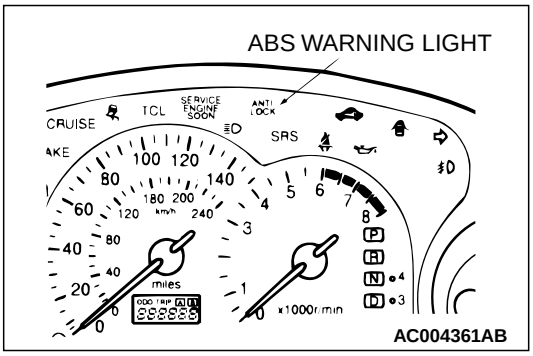

3. Read out a diagnostic trouble code by observing how the warning light flashes.

WHEN THE DIAGNOSTIC TROUBLE CODE NO. 24 IS OUTPUT	WHEN NO DIAGNOSTIC TROUBLE CODE IS OUTPUT
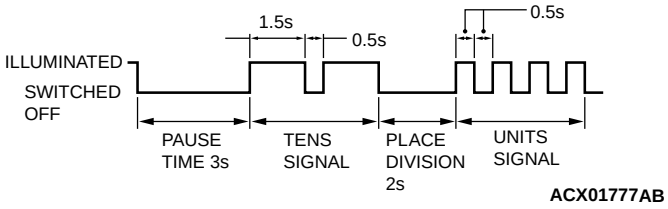	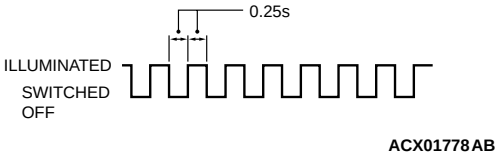

4. Disconnect special tool MB991529.

Erasing ABS Diagnostic Trouble Codes

NOTE: If the ABS-ECU functions have stopped due to the fail-safe function, the diagnostic trouble code cannot be erased.

Using Scan Tool MB991502

Required Special Tool:

- MB991502: Scan Tool (MUT-II)

⚠ CAUTION

To prevent damage to scan tool MB991502, always turn the ignition switch to the "LOOK" (OFF) position before connecting or disconnecting the scan tool.

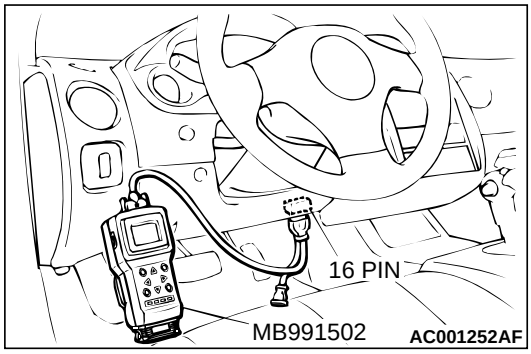

1. Connect scan tool MB991502 to the data link connector.
2. Turn the ignition switch to the "ON" position.
3. Use scan tool MB991502 to erase ABS diagnostic trouble codes.
4. Turn the ignition switch to the "LOOK" (OFF) position.
5. Disconnect scan tool MB991502.

By Special Operation for Brake Pedal

Required Special Tool:

- MB991529: Diagnostic Trouble Code Check Harness

1. Use special tool MB991529 to ground number 1 terminal of the data link connector.

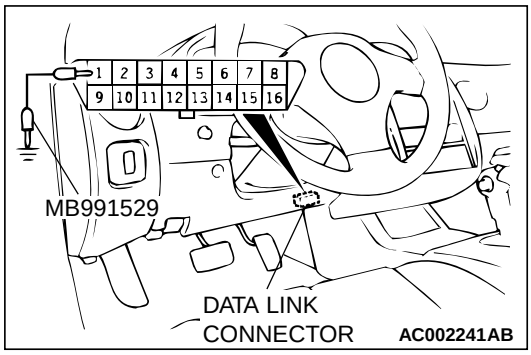

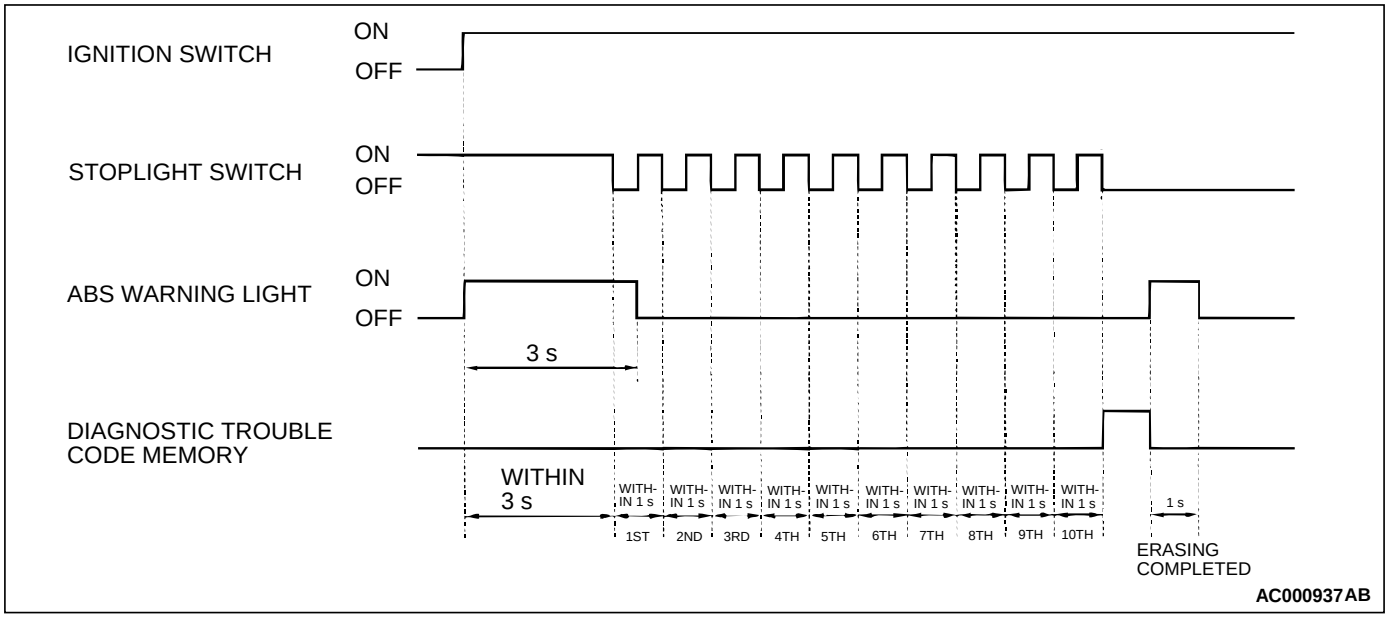

2. Depress the brake pedal and hold it.
3. Turn the ignition switch to the "ON" position.
4. After turning the ignition switch to the "ON" position, release the brake pedal within three seconds. Repeat this process of pressing and releasing the brake pedal 10 continuous times.
5. Turn the ignition switch to the "LOOK" (OFF) position.
6. Disconnect special tool MB991529.

DIAGNOSTIC TROUBLE CODE CHART

M1352011300281

Follow the inspection chart that is appropriate for the diagnostic trouble code.

DIAGNOSTIC TROUBLE CODE NO.	INSPECTION ITEM	DIAGNOSTIC CONTENT	REFERENCE PAGE
11	Front right wheel speed sensor	Open circuit or short circuit	P.35B-8
12	Front left wheel speed sensor		
13	Rear right wheel speed sensor		
14	Rear left wheel speed sensor		
15	Wheel speed sensor	Abnormal output signal	P.35B-14
16	Power supply system	ABS-ECU power supply voltage below or above the standard value. Not displayed if the voltage recovers.	Check the battery. (Refer to GROUP 54A, Battery – On-vehicle Service – Battery Check P.54A-5.)
21	Front right wheel speed sensor		P.35B-8
22	Front left wheel speed sensor		
23	Rear right wheel speed sensor		
24	Rear left wheel speed sensor		
31*	TCL front left solenoid valve (IN)		Refer to GROUP 35C, Diagnostic Trouble Code Chart P.35C-7.)
32*	TCL front left solenoid valve (OUT)		
33*	TCL front right solenoid valve (IN)		
34*	TCL front right solenoid valve (OUT)		
38	Stoplight switch system		P.35B-19
41	ABS front right solenoid valve (IN)		P.35B-24
42	ABS front left solenoid valve (IN)		
43	ABS rear right solenoid valve (IN)		
44	ABS rear left solenoid valve (IN)		
45	ABS front right solenoid valve (OUT)		
46	ABS front left solenoid valve (OUT)		
47	ABS rear right solenoid valve (OUT)		
48	ABS rear left solenoid valve (OUT)		
51	Valve power supply		
53	Pump motor		
63	ABS-ECU		Replace the hydraulic unit (Integrated with ABS-ECU).

NOTE:

**: Vehicles with TCL*

DIAGNOSTIC TROUBLE CODE PROCEDURES

DTC 11, 12, 13, 14, 21, 22, 23, 24: Wheel Speed Sensor

Wheel Speed Sensor Circuit

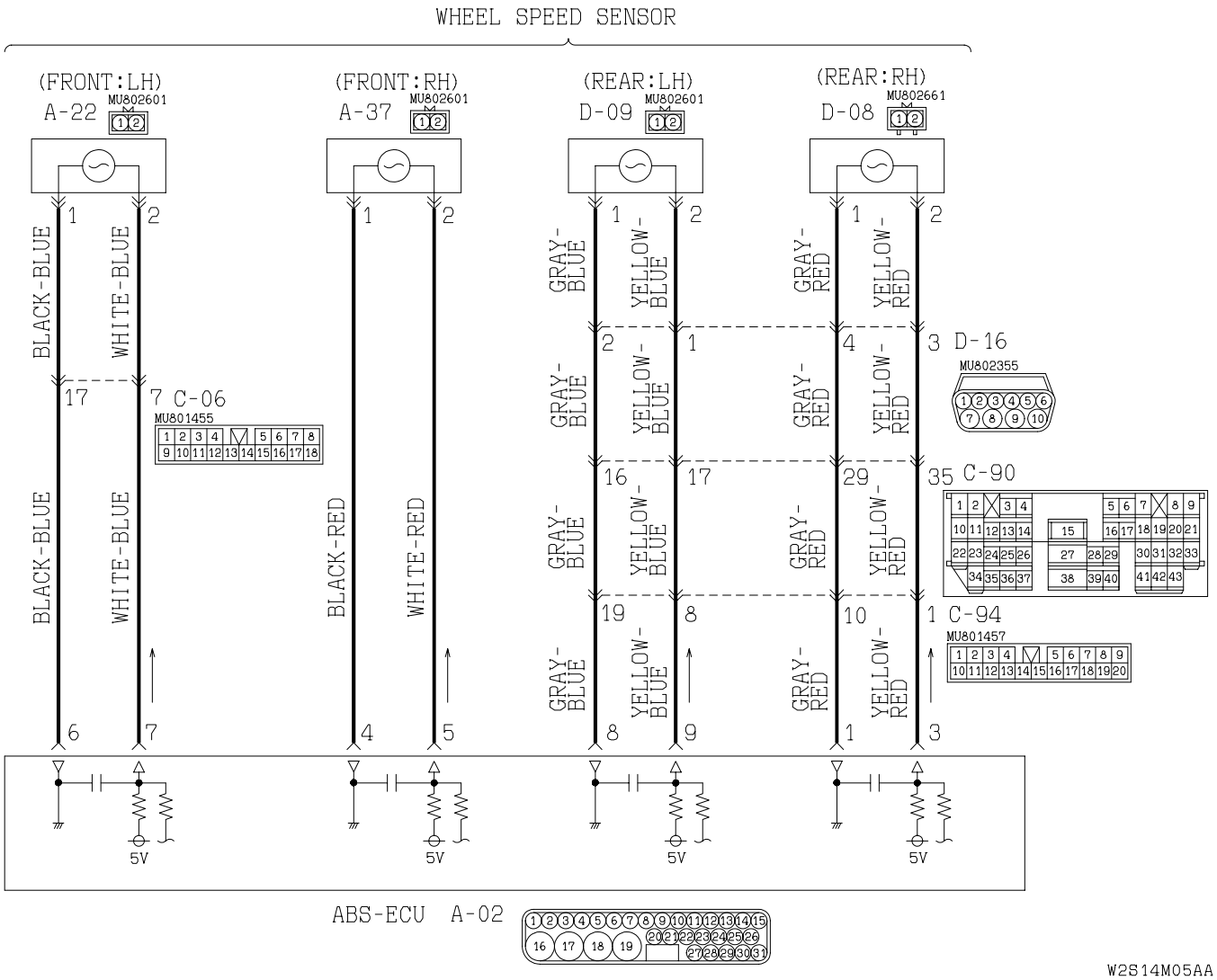

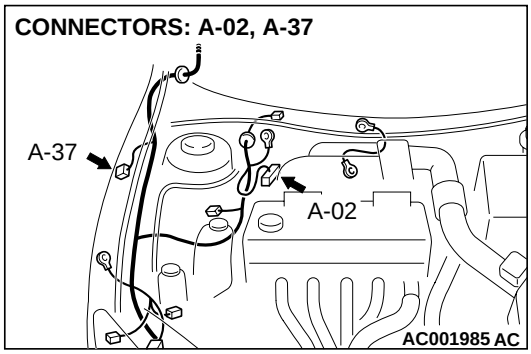

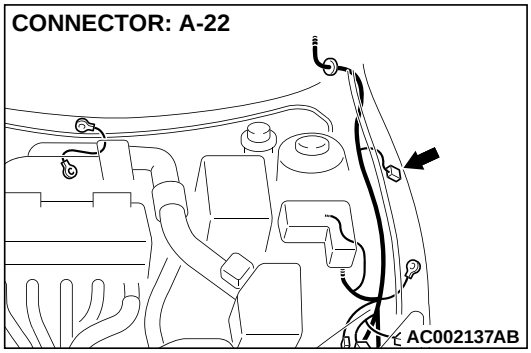

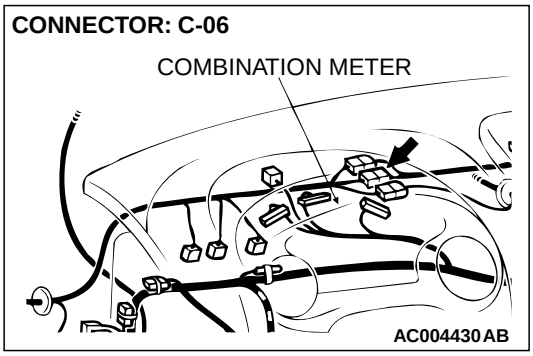

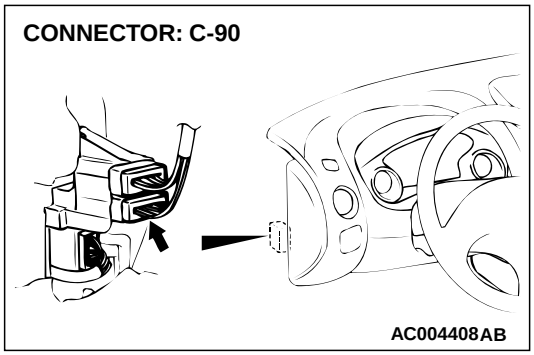

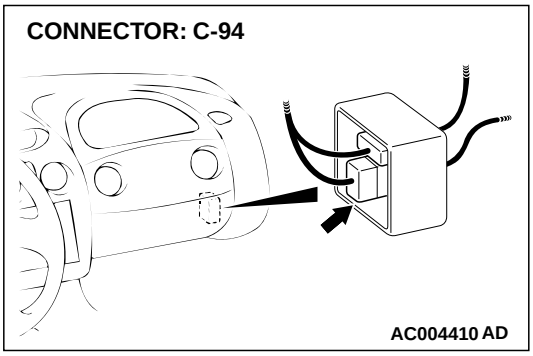

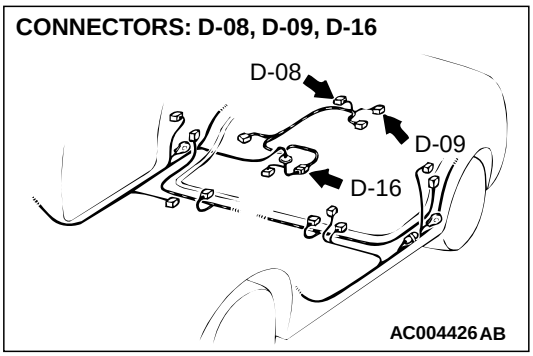

CIRCUIT OPERATION

- A toothed ABS rotor generates a voltage pulse as it moves across the pickup field of each wheel speed sensor.
- The amount of voltage generated at each wheel is determined by the clearance between the ABS rotor teeth and the wheel speed sensor, and by the speed of rotation.
- The wheel speed sensors transmit the frequency of the voltage pulses and the amount of voltage generated by each pulse to the ABS-ECU.
- The ABS hydraulic unit modulates the amount of braking force individually applied to each wheel cylinder.

ABS DTC SET CONDITIONS

- DTCs 11, 12, 13, 14 are output when signal is not input due to breakage of the wires of one or more of the four wheel-speed sensors. DTCs 21, 22, 23, 24 are output in the following cases:
- Open circuit is not found but no input is received by one or more of the four wheel speed sensors at 10 km/h (6 mph) or more.
- Sensor output drops due to a malfunctioning sensor or warped ABS rotor.

TROUBLESHOOTING HINTS (The most likely causes for these DTCs are to set are:)

DTC11, 12, 13, 14

- Malfunction of the wheel speed sensor
- Damaged wiring harness or connector
- Malfunction of the hydraulic unit (integrated with ABS-ECU)

DTC21, 22, 23, 24

- Malfunction of the wheel speed sensor
- Damaged wiring harness or connector
- Malfunction of the hydraulic unit (integrated with ABS-ECU)
- Malfunction of the ABS rotor
- Malfunction of the wheel bearing
- Excessive clearance between the sensor and ABS rotor

DIAGNOSIS

Required Special Tools:

- MB991223: Harness Set
- MB991502: Scan Tool (MUT-II)
- MB991529: Diagnostic Trouble Code Check Harness

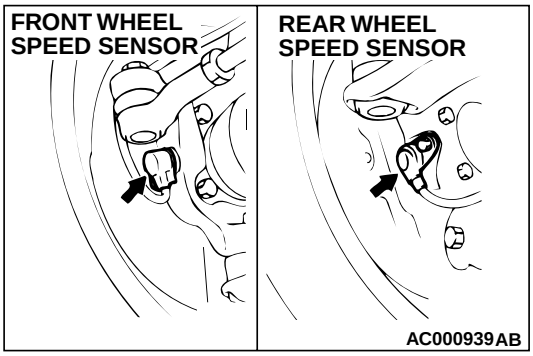

STEP 1. Check the wheel speed sensor installation.

Q: Is the wheel speed sensor bolted securely in place at the front knuckle or the rear knuckle?

YES : Go to Step 2.

NO : Install it properly (Refer to P.35B-55.) and go to Step 9 .

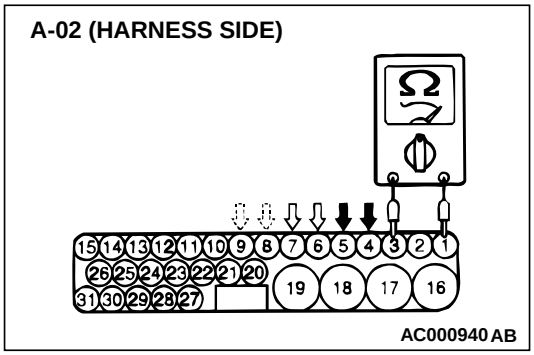

STEP 2. Check wheel speed sensor circuit at the ABS-ECU connector A-02.

(1) Disconnect the connector A-02 and measure at the harness side.

(2) Measure the resistance between the ABS-ECU connector terminals 1 and 3, 4 and 5, 6 and 7, or 8 and 9.

Standard Value: 1.28 – 1.92 kΩ

Q: Is the resistance between terminals 1 and 3, 4 and 5, 6 and 7, or 8 and 9 within the standard value?

YES : Go to Step 6.

NO <terminals 6 and 7> : Go to Step 3.

NO <terminals 4 and 5> : Go to Step 4.

NO <terminals 1 and 3, 8 and 9> : Go to Step 5.

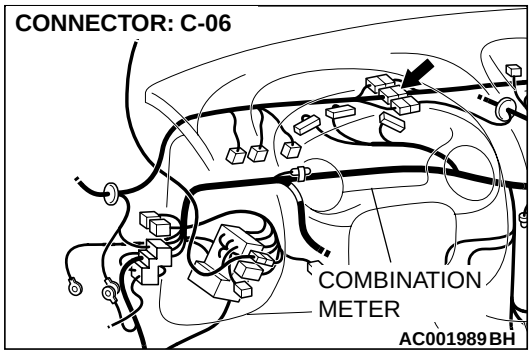

STEP 3. Check the harness wires between the ABS-ECU connector A-02 (terminals 6 and 7) and the wheel speed sensor <front: LH> connector A-22 (terminals 1 and 2).

NOTE: After inspecting the intermediate connector C-06, inspect the wires. If the intermediate connector C-06 is damaged, repair or replace it. Refer to GROUP 00E, Harness Connector Inspection P.00E-2. If the connector has been repaired or replaced, go to Step 9.

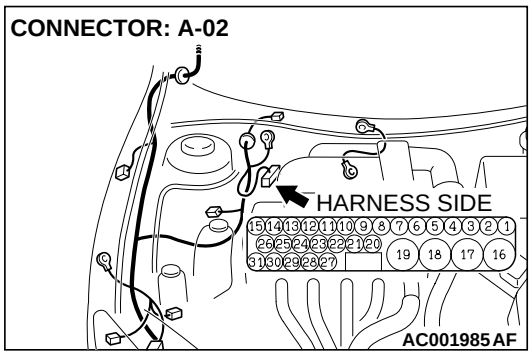

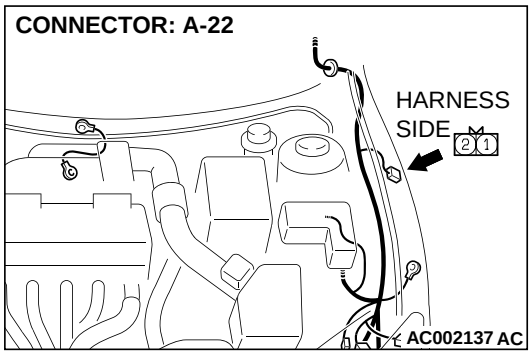

Q: Is any of the harness wires between the ABS-ECU connector A-02 (terminals 6 and 7) and the wheel speed sensor <front: LH> connector A-22 (terminals 1 and 2) damaged?

YES : Repair it and go to Step 9.
NO : Go to Step 7.

STEP 4. Check the harness wires between the ABS-ECU connector A-02 (terminals 4 and 5) and the wheel speed sensor <front: RH> connector A-37 (terminals 1 and 2).

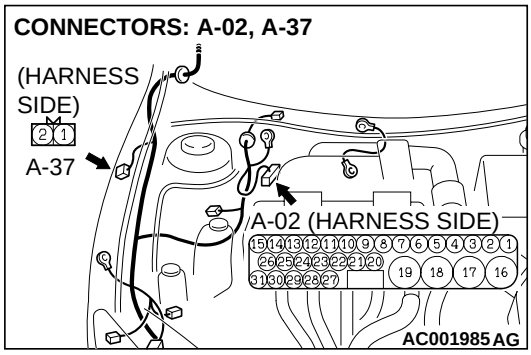

Q: Is any of the harness wires between the ABS-ECU connector A-02 (terminals 4 and 5) and the wheel speed sensor <front: RH> connector A-37 (terminals 1 and 2) damaged?

YES : Repair it and then go to Step 9.
NO : Go to Step 7.

STEP 5. Check the harness wires between the ABS-ECU connector A-02 (terminals 1, 3, 8, and 9) and the wheel speed sensor connectors D-08 <rear: RH> (terminals 1 and 2) or D-09 <rear: LH> (terminals 1 and 2).

NOTE: After inspecting the intermediate connector C-90, C-94 or D-16, inspect the wires. If the intermediate connector C-90, C-94 or D-16 is damaged, repair or replace it. Refer to GROUP 00E, Harness Connector Inspection P.00E-2. If the connector has been repaired or replaced, go to Step 9.

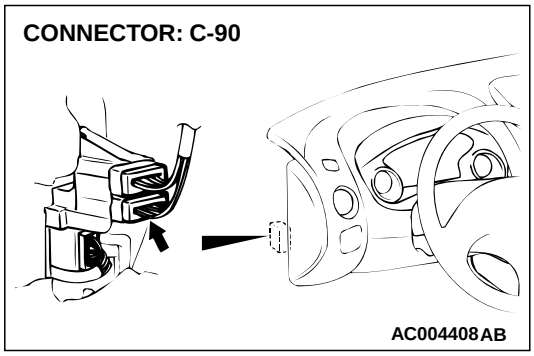

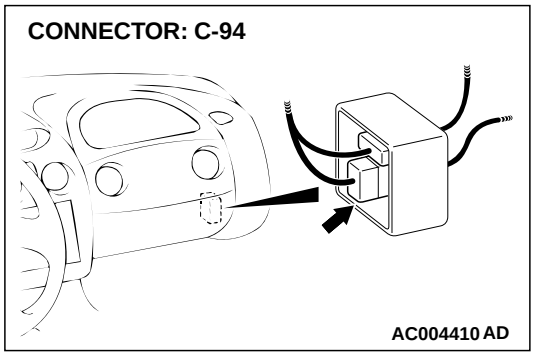

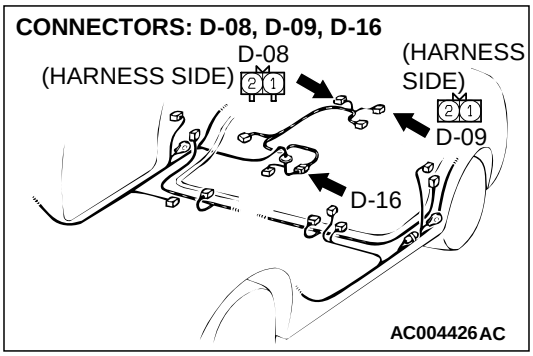

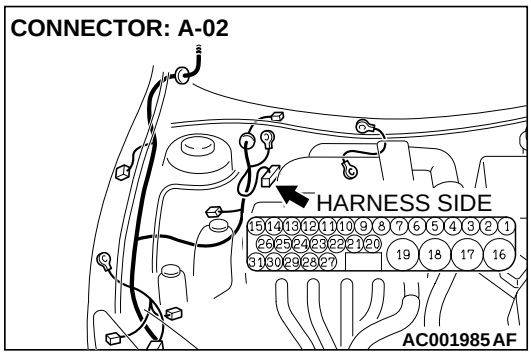

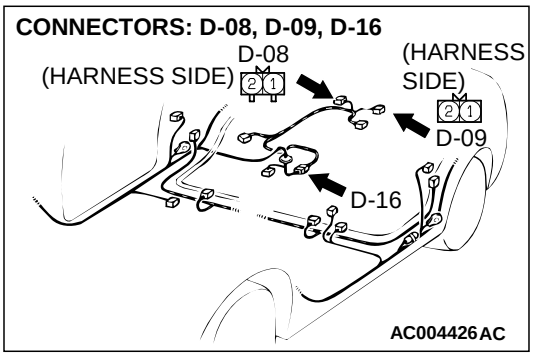

Q: Is any of the harness wires between the ABS-ECU connector A-02 (terminals 1, 3, 8, and 9) and the wheel speed sensor connectors D-08 <rear: RH> (terminals 1 and 2) or D-09 <rear: LH> (terminals 1 and 2) damaged?

YES : Repair it and then go to Step 9.
NO : Go to Step 7.

STEP 6. Check the wheel speed sensor output voltage.
Refer to P.35B-46.

Output Voltage:
- When measured with a voltmeter: 42 mV or more
- When measured with oscilloscope (maximum voltage): 200 mV or more

Q: Does the voltage meet the specification?

YES : Replace the hydraulic unit (integrated with ABS-ECU) and then go to Step 9.
NO : Go to Step 7.

STEP 7. Check the wheel speed sensor or ABS rotor.
Refer to P.35B-55. If there is a damage in any of the following check items, replace the wheel speed sensor or the ABS rotor.

Check items:
- Wheel speed sensor internal resistance

  Standard value: 1.28 – 1.92 kΩ
- Insulation between the wheel speed sensor body and connector terminals
- Toothed ABS rotor

Q: Is the wheel speed sensor or ABS rotor damaged?

YES : Replace the faulty part and then go to Step 9.
NO : Go to Step 8.

STEP 8. Check the wheel bearing.
Refer to GROUP 26, Front Hub Assembly P.26-7, or GROUP 27, Rear Axle Hub P.27-6.

Q: Is the wheel bearing damaged?
YES : Replace it and then go to Step 9.
NO : Go to Step 9.

STEP 9. Check the diagnostic trouble codes.

Q: Do the diagnostic trouble codes 11, 12, 13, 14, 21, 22, 23 or 24 reset?
YES : Go to Step 1.
NO : This diagnosis is complete.

DTC 15: Wheel Speed Sensor (Abnormal Output Signal)

WHEEL SPEED SENSOR CIRCUIT
Refer to P.35B-8.

CIRCUIT OPERATION
Refer to P.35B-8.

ABS DTC SET CONDITIONS
- DTC 15 is output when output signal produced by any of wheel speed sensor is abnormal (excluding short and open-circuits).

TROUBLESHOOTING HINTS (The most likely causes for this DTC is to set are:)
- Improper installation of the wheel speed sensor
- Malfunction of the wheel speed sensor
- Damaged wiring harness or connector
- Malfunction of the ABS rotor
- Malfunction of the wheel bearing

DIAGNOSIS

Required Special Tools:
- MB991223: Harness Set
- MB991502: Scan Tool (MUT-II)
- MB991529: Diagnostic Trouble Code Check Harness

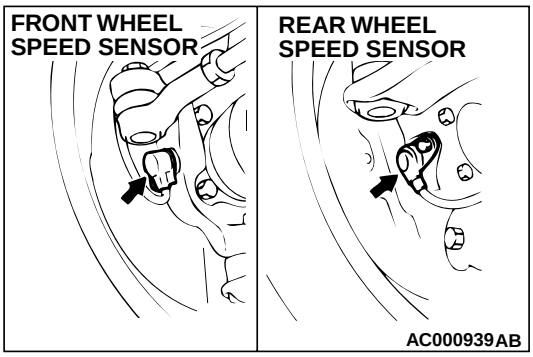

STEP 1. Check the wheel speed sensor installation.
Q: Are the wheel speed sensors bolted securely in place at the front knuckle or the rear knuckle?
YES : Go to Step 2.
NO : Install it properly. (Refer to P.35B-55.) Then go to Step 8 .

STEP 2. Check the harness wires between the ABS-ECU connector A-02 (terminals 6 and 7) and the wheel speed sensor <front: LH> connector A-22 (terminals 1 and 2).

NOTE: After inspecting the intermediate connector C-06, inspect the wires. If the intermediate connector C-06 is damaged, repair or replace it. Refer to GROUP 00E, Harness Connector Inspection P.00E-2. If the connector has been repaired or replaced, go to Step 8.

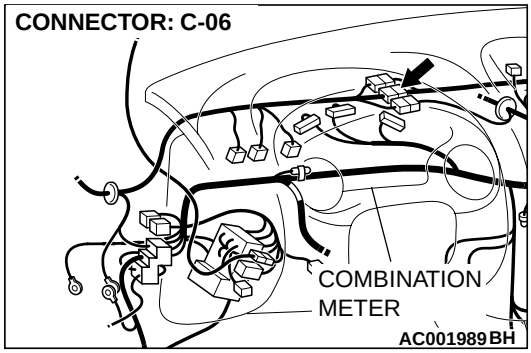

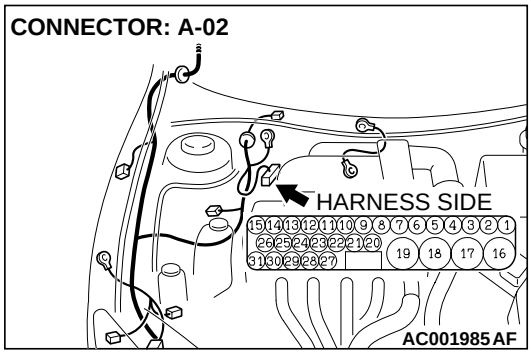

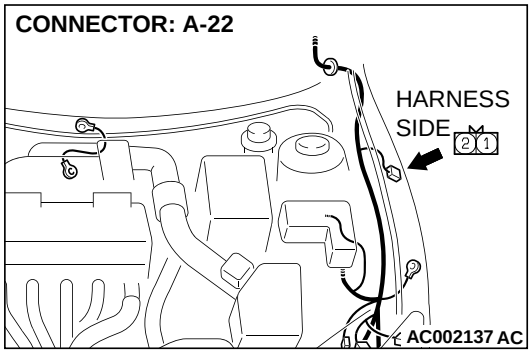

Q: Is any of the harness wires between the ABS-ECU connector A-02 (terminals 6 and 7) and the wheel speed sensor <front: LH> connector A-22 (terminals 1 and 2) damaged?

YES : Repair it and go to Step 8.
NO : Go to Step 3.

STEP 3. Check the harness wires between the ABS-ECU connector A-02 (terminals 4 and 5) and the wheel speed sensor <front: RH> connector A-37 (terminals 1 and 2).

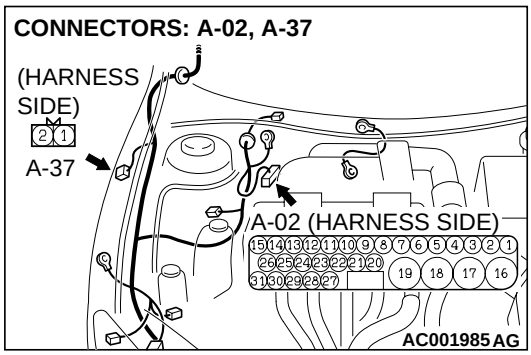

Q: Is any of the harness wires between the ABS-ECU connector A-02 (terminals 4 and 5) and the wheel speed sensor <front: RH> connector A-37 (terminals 1 and 2) damaged?

YES : Repair it and then go to Step 8.
NO : Go to Step 4.

STEP 4. Check the harness wires between the ABS-ECU connector A-02 (terminals 1, 3, 8, and 9) and the wheel speed sensor connector D-08 <rear: RH> (terminals 1 and 2) or D-09 <rear: LH> (terminals 1 and 2).

NOTE: After inspecting the intermediate connectors C-90, C-94 and D-16, inspect the wires. If the intermediate connector C-90, C-94 or D-16 is damaged, repair or replace it. Refer to GROUP 00E, Harness Connector Inspection P.00E-2. If the connector has been repaired or replaced, go to Step 8.

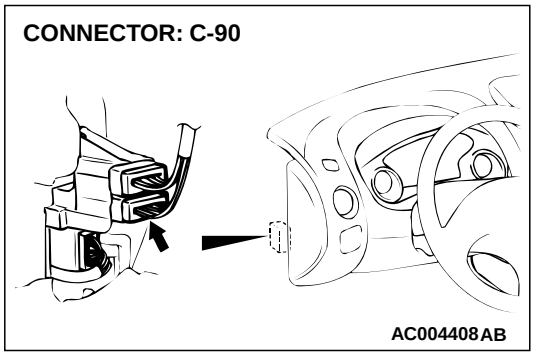

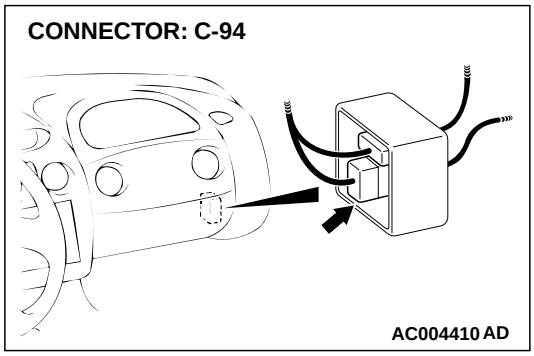

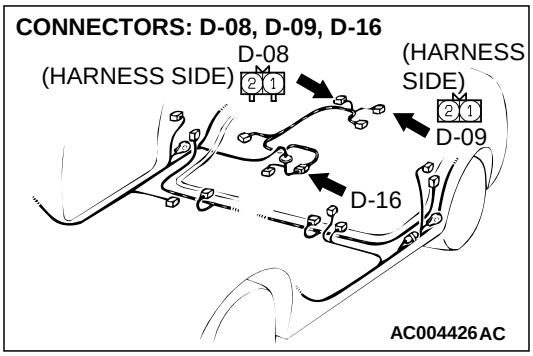

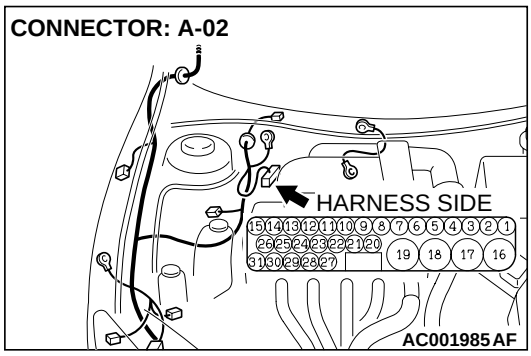

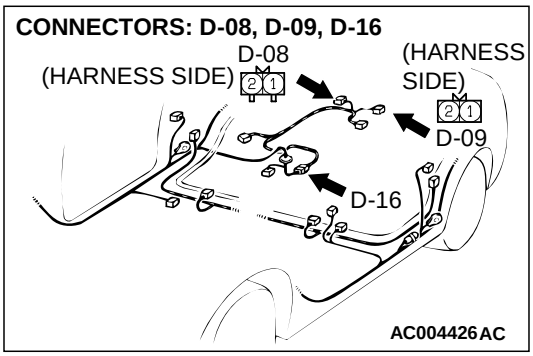

Q: Is any of the harness wires between the ABS-ECU connector A-02 (terminals 1, 3, 8, and 9) and the wheel speed sensor connector D-08 <rear: RH> (terminals 1 and 2) or D-09 <rear: LH> (terminals 1 and 2) damaged?

YES : Repair it and then go to Step 8.
NO : Go to Step 5.

STEP 5. Check each wheel speed sensor output voltage.
Refer to P.35B-46.

Output Voltage:
- When measured with a voltmeter: 42 mV or more
- When measured with oscilloscope (maximum voltage): 200 mV or more

Q: Does the voltage meet the specification?

YES : Replace the hydraulic unit (integrated with ABS-ECU) and then go to Step 8.
NO : Go to Step 6.

STEP 6. Check the wheel speed sensors or ABS rotors.
Refer to P.35B-55. If there is a damage in any of the following check items, replace the wheel speed sensor or the ABS rotor.

Check items:
- Wheel speed sensor internal resistance

  Standard value: 1.28 – 1.92 kΩ
- Insulation between the wheel speed sensor body and the connector terminals
- Toothed ABS rotor

Q: Is any of the wheel speed sensors or ABS rotors damaged?

YES : Replace the faulty part and then go to Step 8.
NO : Go to Step 7.

STEP 7. Check the wheel bearings.

Refer to GROUP 26, Front Hub Assembly P.26-7, or GROUP 27, Rear Axle Hub P.27-6.

Q: Is any of the wheel bearings damaged?

YES : Replace it and then go to Step 8.
NO : Go to Step 8.

STEP 8. Check the diagnostic trouble codes.

Q: Do the diagnostic trouble code 15 reset?

YES : Go to Step 1.
NO : This diagnosis is complete.

DTC 38: Stoplight Switch System

Stoplight Switch Circuit

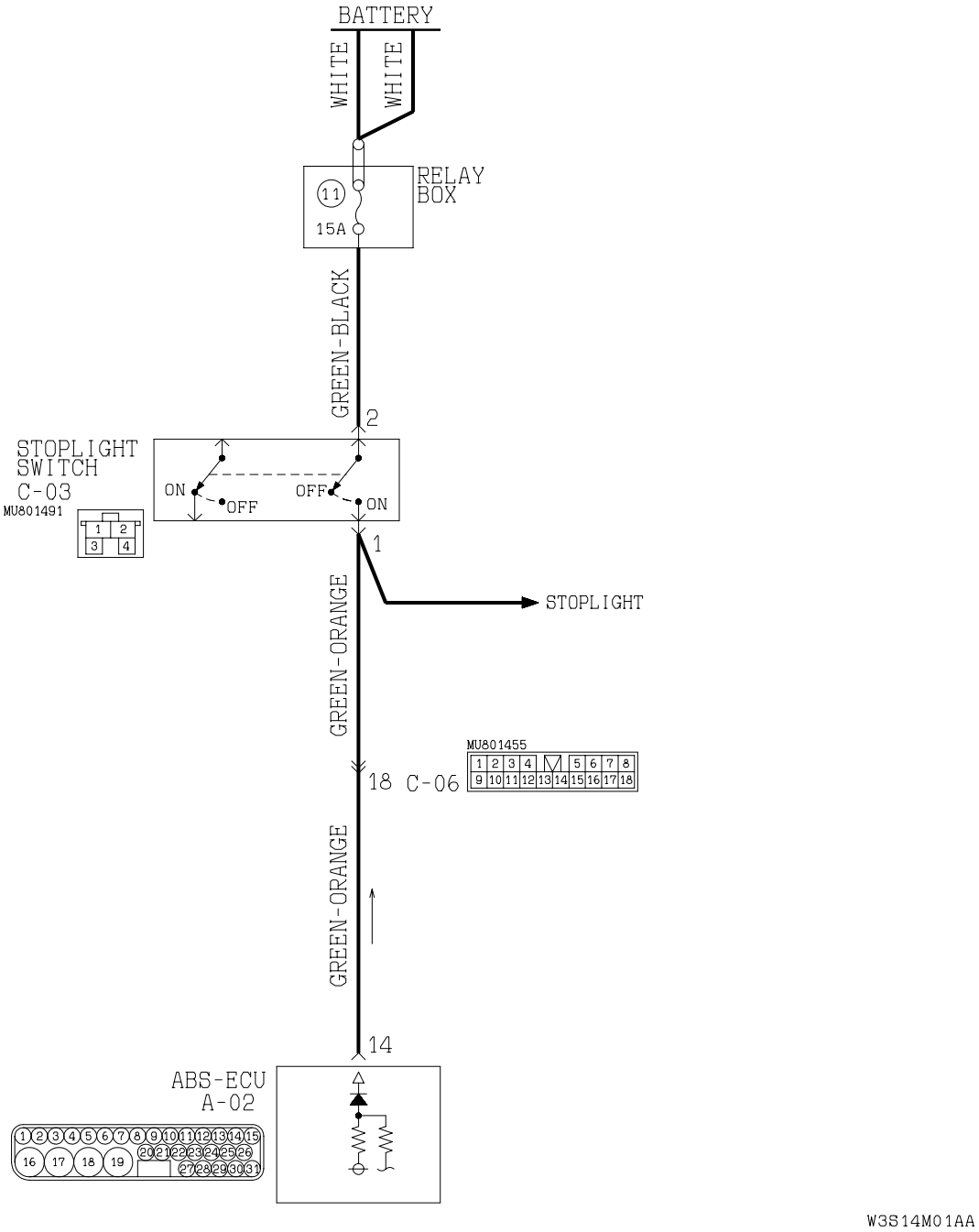

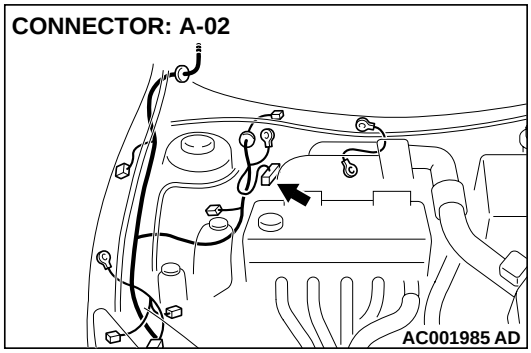

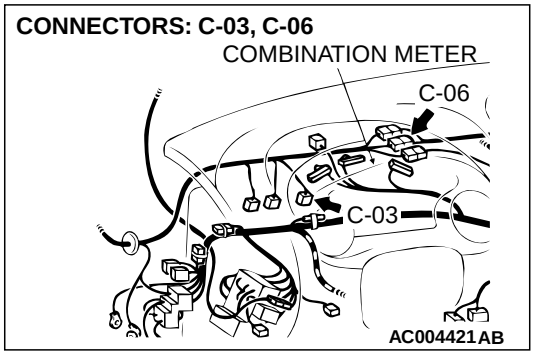

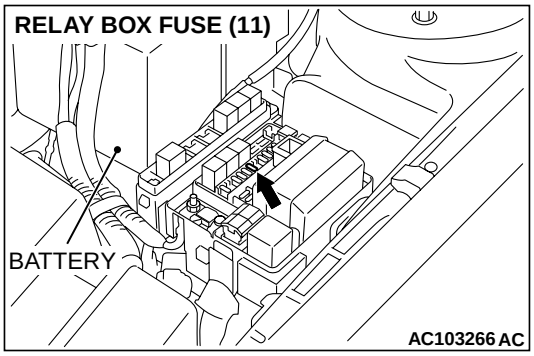

CIRCUIT OPERATION

- The ON signal when the brake pedal is pressed or the OFF signal when the brake pedal is released is input to the ABS-ECU (terminal 14).

ABS DTC SET CONDITION

Output is provided in the following cases:

- Stoplight switch is not operating properly and remains in ON state for more than 15 minutes.
- Stoplight switch system harness is damaged and no signal is input to ABS-ECU.

TROUBLESHOOTING HINTS (The most likely causes for this DTC is to set are:)

- Malfunction of the stoplight switch
- Damaged wiring harness or connector
- Malfunction of the hydraulic unit (integrated with ABS-ECU)

DIAGNOSIS

Required Special Tools:

- MB991223: Harness Set
- MB991502: Scan Tool (MUT-II)
- MB991529: Diagnostic Trouble Code Check Harness

STEP 1. Check the stoplight operation.

Q: Does the stoplight light or go out correctly?

YES : Go to Step 3.
NO : Go to Step 2.

STEP 2. Check the stoplight switch installation condition.

Q: Is the stoplight switch installed properly?

YES : Go to Step 4.
NO : Install it correctly and then go to Step 7.

STEP 3. Check the stoplight switch circuit at the ABS-ECU connector A-02.

(1) Disconnect the ABS-ECU connector A-02 and measure at the harness side.
(2) Press the brake pedal. (The stoplight switch is turned to ON.)
(3) Measure the voltage between terminal 14 and ground.

Q: Is the voltage approximately 12 volts (battery positive voltage)?

YES : Replace the hydraulic unit (integrated with ABS-ECU) and then go to Step 7.
NO : Go to Step 5.

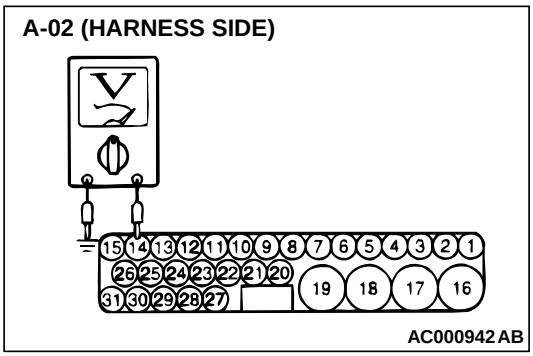

STEP 4. Check the stoplight switch continuity.

(1) Remove the stoplight switch. (Refer to GROUP 35A, Brake Pedal P.35A-31.)
(2) Connect an ohmmeter to the stoplight switch terminals 1 and 2, and check whether there is continuity when the plunger of the stoplight switch is pushed in and when it is released.

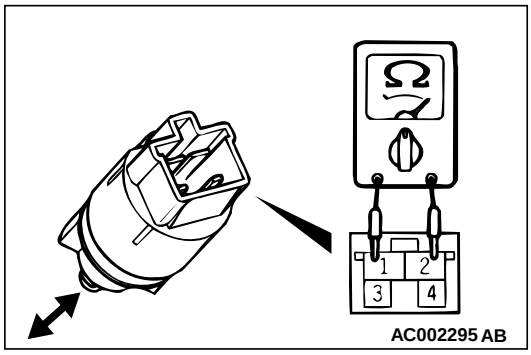

(3) The stoplight switch is in good condition if there is no continuity when the plunger is pushed in to a depth of within 4 mm (0.2 inch) from the outer case edge surface, and if there is continuity when it is released.

Q: Is the stoplight switch damaged?

YES : Replace it and then go to Step 7.
NO : Go to Step 6.

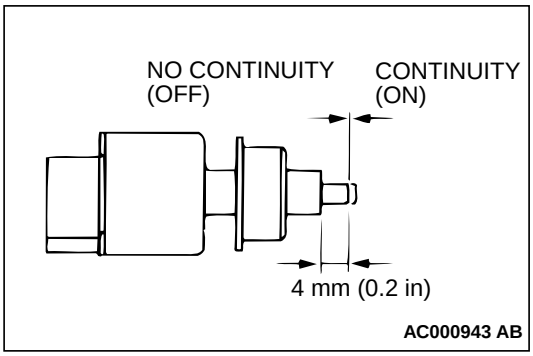

STEP 5. Check the harness wire between the ABS-ECU connector A-02 (terminal 14) and the stoplight switch connector C-03 (terminal 1).

NOTE: After inspecting the intermediate connector C-06, inspect the wire. If the intermediate connector C-06 is damaged, repair or replace it. Refer to GROUP 00E, Harness Connector Inspection P.00E-2. If the connector has been repaired or replaced, go to Step 7.

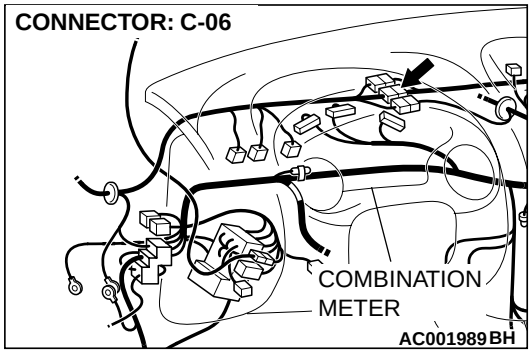

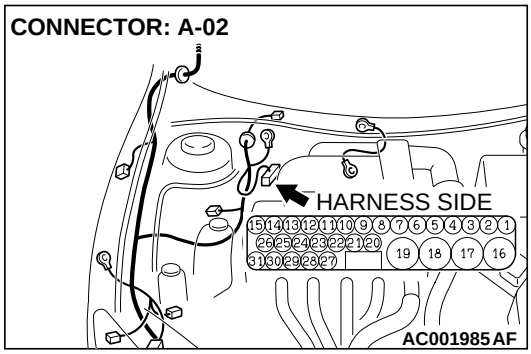

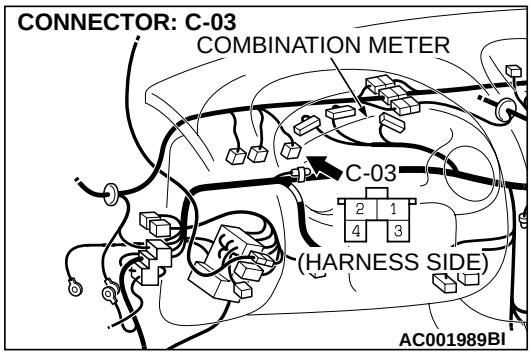

Q: Is the harness wire between the ABS-ECU connector A-02 (terminal 14) and the stoplight switch connector C-03 (terminal 1) damaged?

YES : Repair it and then go to Step 7.

NO : No action is to be taken.

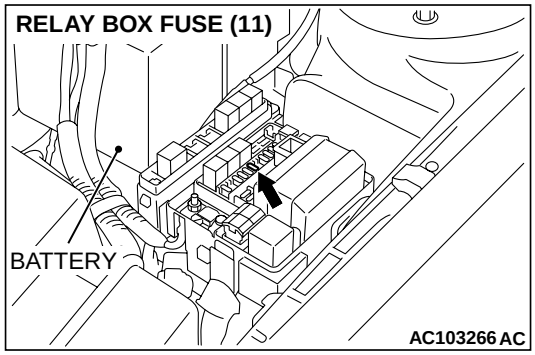

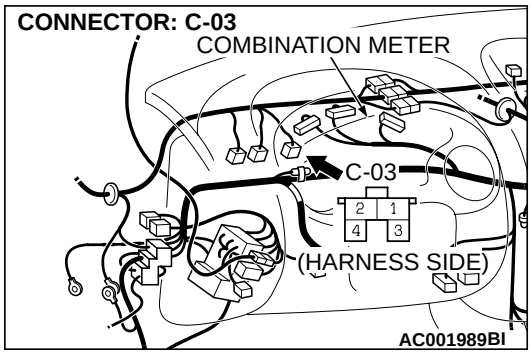

STEP 6. Check the harness wire between relay box fuse number 11 and stoplight switch connector C-03 (terminal 2).

Q: Is the harness wire between the relay box fuse number 11 and the stoplight switch connector C-03 (terminal 2) damaged?

YES : Repair it and then go to Step 7.

NO : Check and repair the harness wire between stoplight switch and stoplight. Then go to Step 7.

STEP 7. Check the diagnostic trouble code.

Q: Does the diagnostic trouble code 38 reset?

YES : Return to Step 1.

NO : This diagnosis is complete.

DTC 41, 42, 43, 44, 45, 46, 47, 48: ABS Solenoid Valve inside Hydraulic Unit (Open Circuit or Short circuit) /DTC 51: Valve Power Supply /DTC 53: Pump Motor

Solenoid Valve and Motor Power Supply Circuit

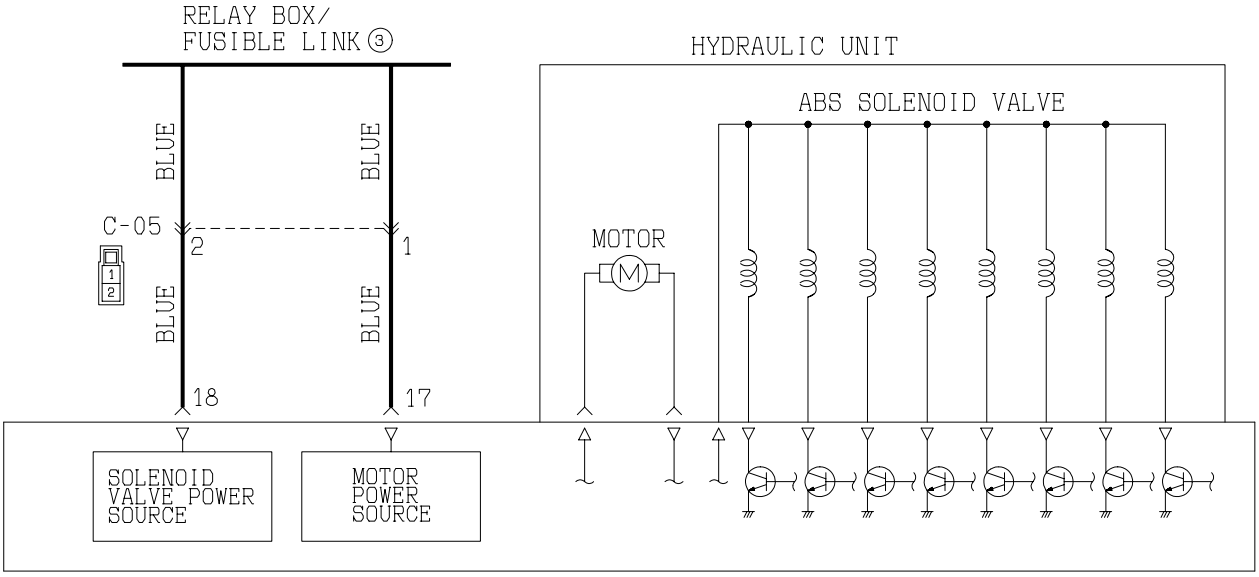

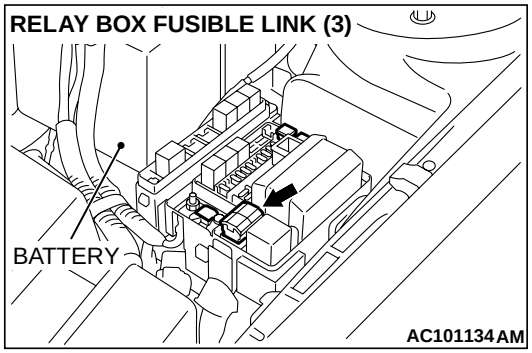

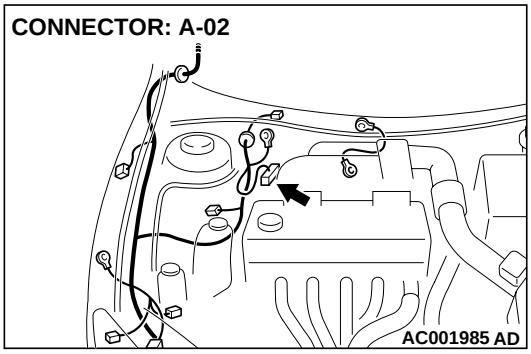

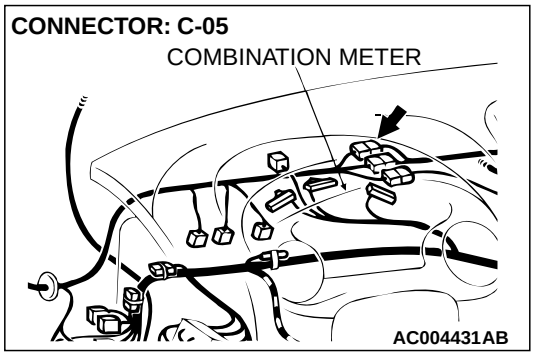

CIRCUIT OPERATION

Power is continuously supplied to the ABS-ECU through the relay box fusible link number 3 to operate the solenoid valve and motor.

ABS DTC SET CONDITIONS

These codes are displayed if the power supply circuit of solenoid valve or motor is open or shorted.

TROUBLESHOOTING HINTS (The most likely causes for these DTCs are to set are:)

- Damaged wiring harness or connector
- Malfunction of the hydraulic unit (integrated with ABS-ECU)

DIAGNOSIS

Required Special Tools:

- MB991223: Harness Set
- MB991502: Scan Tool (MUT-II)
- MB991529: Diagnostic Trouble Code Check Harness

STEP 1. Check the solenoid valve or motor power supply circuit at ABS-ECU connector A-02.

(1) Disconnect the ABS-ECU connector A-02 and measure at the harness side.

(2) Measure the voltage between terminal 18 and ground, and 17 and ground.

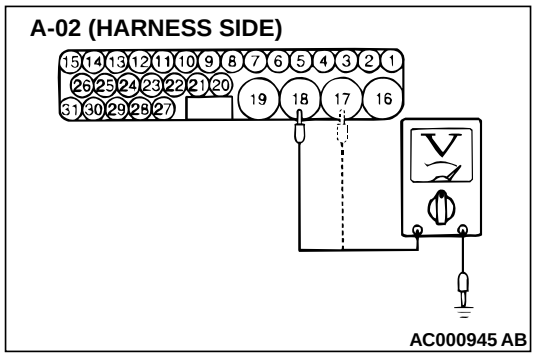

Q: Is the voltage approximately 12 volts (battery positive voltage)?

YES : Replace the hydraulic unit (integrated with ABS-ECU) (Refer to P.35B-52.) and then go to Step 3.

NO : Go to Step 2.

STEP 2. Check the harness wires between the relay box fusible link number 3 and the ABS-ECU connector A-02 (terminals 17 and 18).

NOTE: After inspecting the intermediate connector C-05, inspect the wires. If the intermediate connector C-05 is damaged, repair or replace it. Refer to GROUP 00E, Harness Connector Inspection P.00E-2. If the connector has been repaired or replaced, go to Step 3.

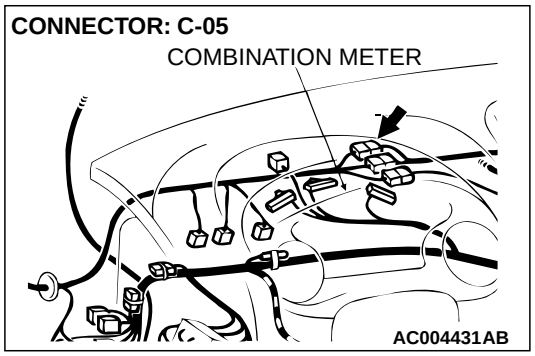

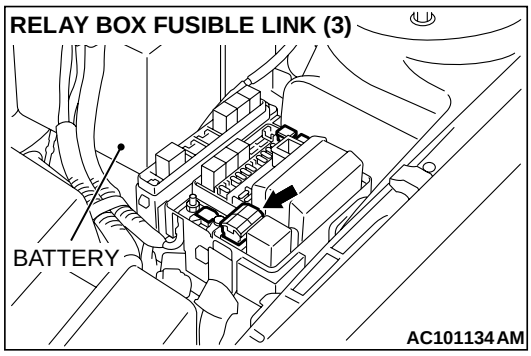

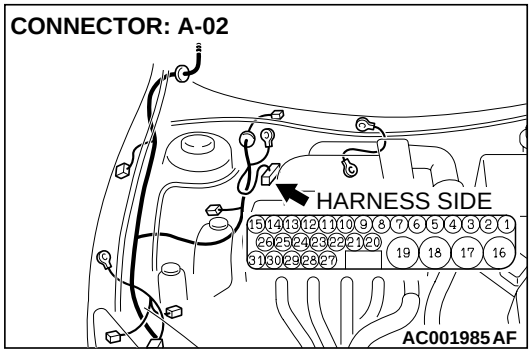

Q: Is any of the harness wires between the relay box fusible link number 3 and the ABS-ECU connector A-02 (terminals 17 and 18) damaged?

YES : Repair it and then go to Step 3.

NO : Go to Step 3.

STEP 3. Check the diagnostic trouble codes.

Q: Do the diagnostic trouble codes 41, 42, 43, 44, 45, 46, 47, 48, 51 or 53 reset?

YES : Go to Step 1.

NO : This diagnosis is complete.

SYMPTOM CHART

M1352011400318

NOTE: If steering movements are made when driving at high speed, or when driving on road surfaces with low frictional resistance, or when passing over bumps, the ABS may operate although sudden braking is not being applied. Because of this, when getting information from the customer, check if the problem occurred while driving under such conditions as these.

NOTE: During ABS operation, the brake pedal may vibrate a little or may not be able to be pressed. Such conditions are due to intermittent changes in hydraulic pressure inside the brake line to prevent the wheels from locking. This is normal.

SYMPTOMS	INSPECTION PROCEDURE NO.	REFERENCE PAGE
Communication between the scan tool and the whole system is not possible.	–	GROUP 13A, Diagnosis P.13A-434 or GROUP 13B, Diagnosis P.13B-530.
Communication between the scan tool and the ABS-ECU is not possible.	1	P.35B-27
When the ignition key is turned to the "ON" position (Engine stopped), the ABS warning light does not illuminate.	2	P.35B-32
The ABS warning light remains illuminated after the engine is started.	3	P.35B-38
Faulty ABS operation	4	P.35B-42

SYMPTOM PROCEDURES

INSPECTION PROCEDURE 1: Communication between the Scan Tool and the ABS-ECU is not Possible.

Data Link Connector Circuit

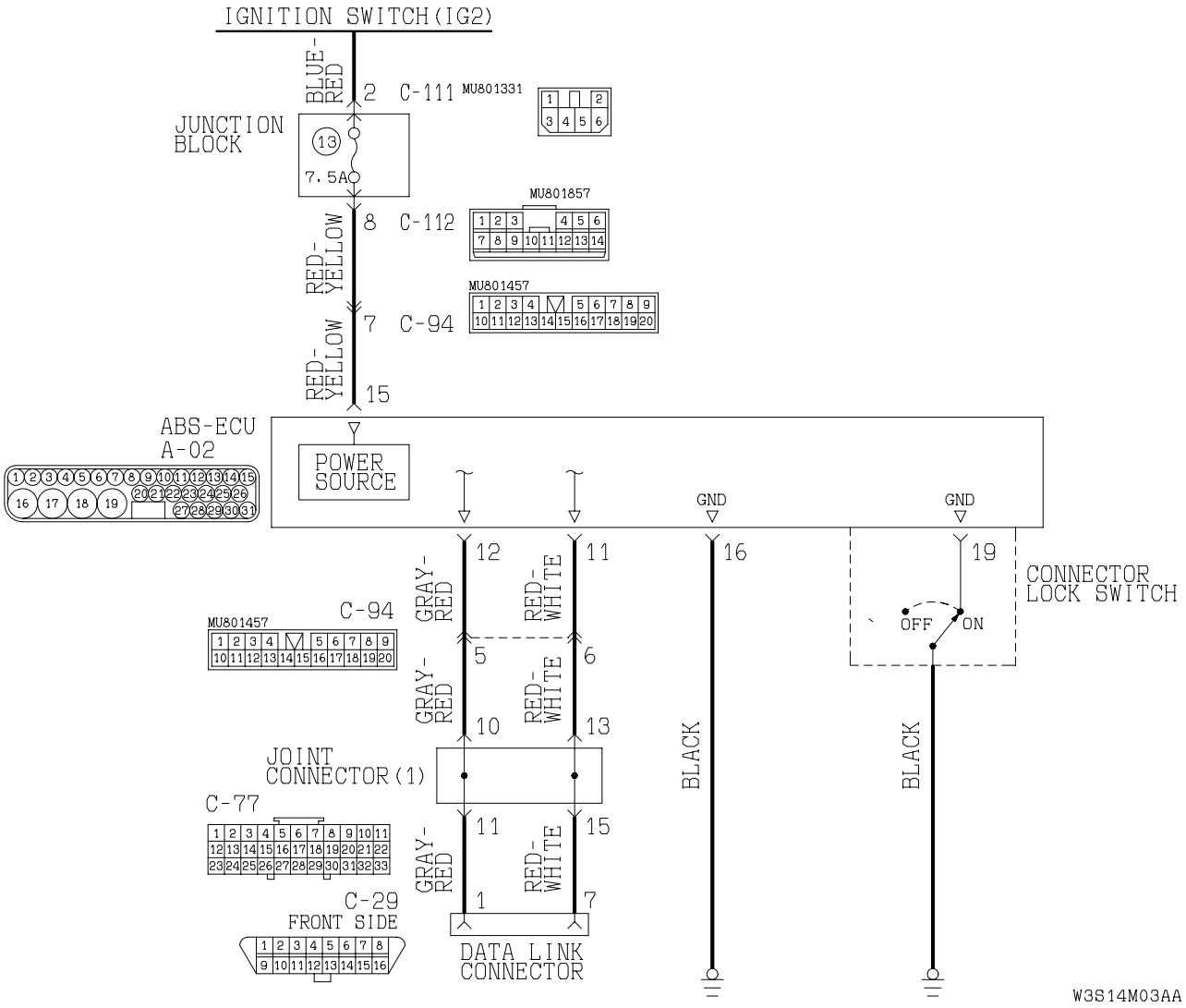

NOTE: CONNECTOR LOCK SWITCH

ON: The ABS-ECU connector A-02 is connected.

OFF: The ABS-ECU connector A-02 is disconnected.

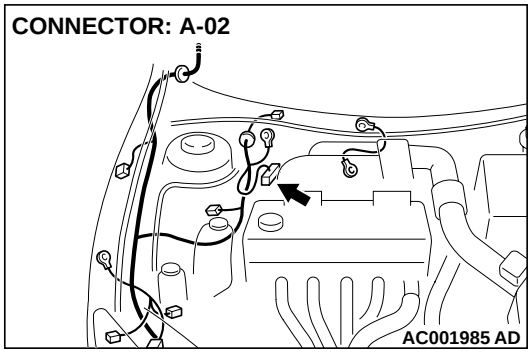

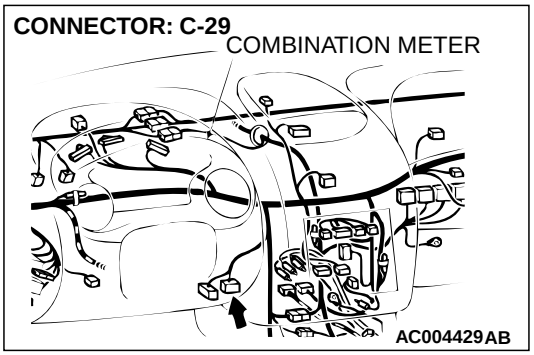

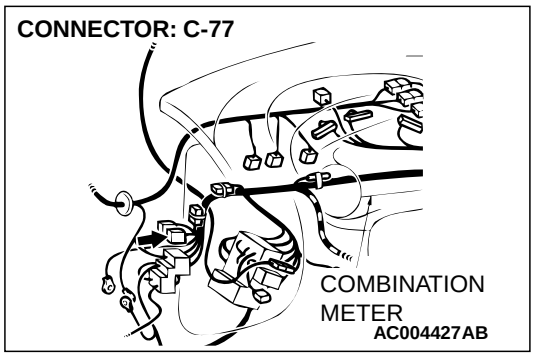

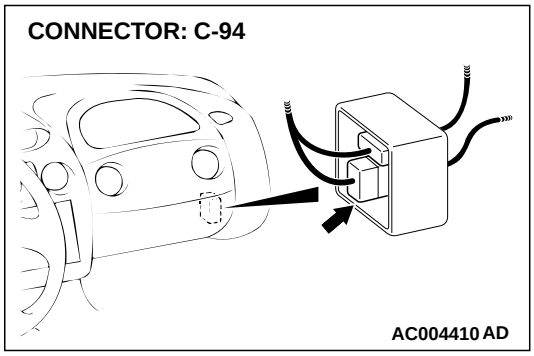

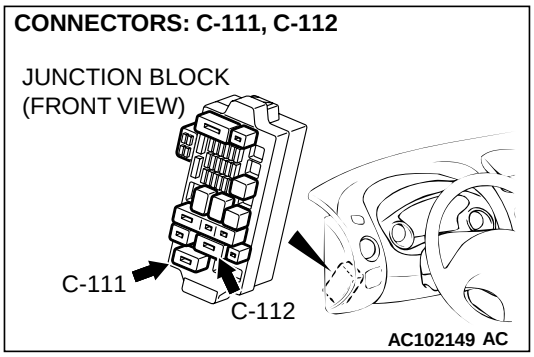

CIRCUIT OPERATION

- The diagnostic output is made from the ABS-ECU (terminal 11) to the diagnostic output terminal (terminal 7) of the data link connector.
- When the data link connector's diagnostic test mode control terminal (terminal 1) is grounded, the ABS-ECU (terminal 12) will go into diagnostic mode.

TECHNICAL DESCRIPTION (COMMENT)

When communication with the scan tool is not possible, the cause is probably an open circuit in the ABS-ECU power circuit or an open circuit in the diagnostic output circuit.

TROUBLESHOOTING HINTS (The most likely causes for this case:)

- Blown fuse
- Damaged wiring harness and connector
- Malfunction of the hydraulic unit (Integrated with ABS-ECU)

DIAGNOSIS

Required Special Tool:
- MB991223: Harness Set

STEP 1. Check the power supply circuit at ABS-ECU connector A-02.

(1) Disconnect connector A-02 and measure at the harness side.
(2) Start the engine.
(3) Measure the voltage between terminal 15 and ground. It should be approximately 12 volts (battery positive voltage).

Q: Is voltage approximately 12 volts (battery positive voltage)?

YES : Go to Step 3.
NO : Go to Step 2.

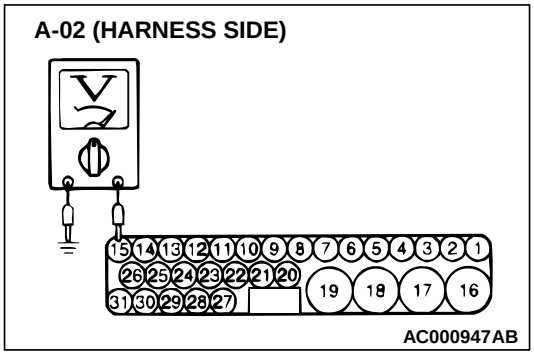

STEP 2. Check the harness wire between the ignition switch (IG2) and the ABS-ECU connector A-02 (terminal 15).

NOTE: After inspecting the intermediate connectors C-94, C-111, and C-112, inspect the wire. If the intermediate connector C-94, C-111, or C-112 is damaged, repair or replace it. Refer to GROUP 00E, Harness Connector Inspection P.00E-2. If the connector has been repaired or replaced, go to Step 5.

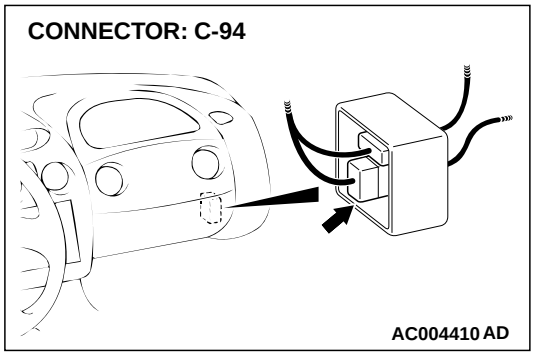

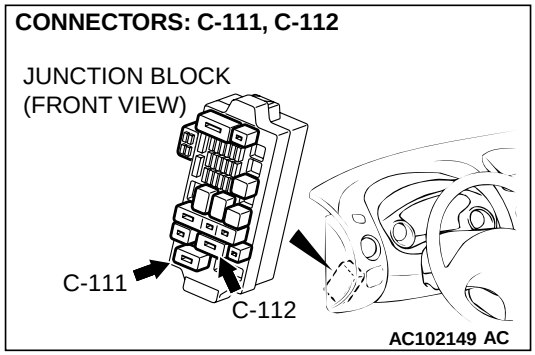

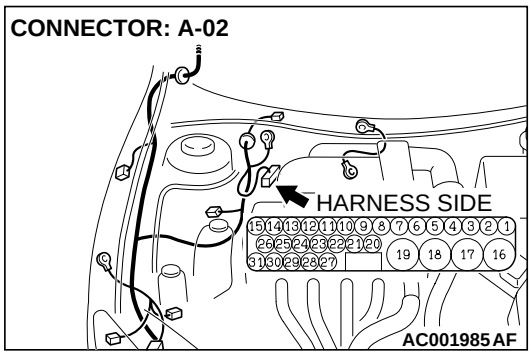

Q: Is the harness wire between the ignition switch (IG2) and the ABS-ECU connector A-02 (terminal 15) damaged?

YES : Repair it and go to Step 5.
NO : Go to Step 3.

STEP 3. Check the harness wires between the ABS-ECU connector A-02 (terminals 11 and 12) and the data link connector C-29 (terminals 1 and 7).

NOTE: After inspecting the intermediate connectors C-77 and C-94, inspect the wires. If the intermediate connector C-77 or C-94 is damaged, repair or replace it. Refer to GROUP 00E, Harness Connector Inspection P.00E-2. If the connector has been repaired or replaced, go to Step 5.

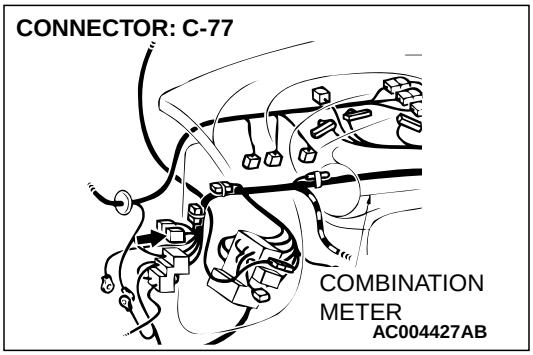

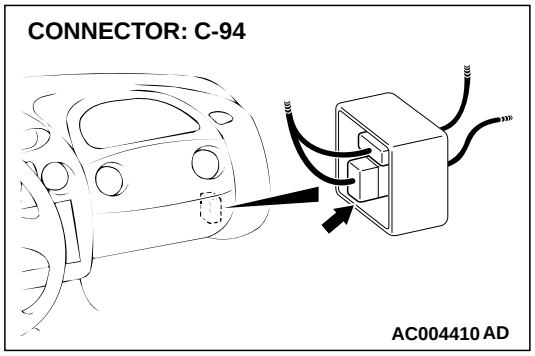

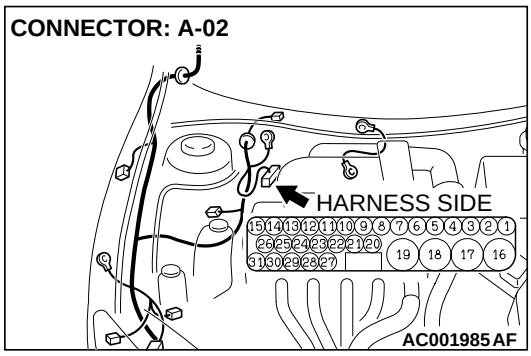

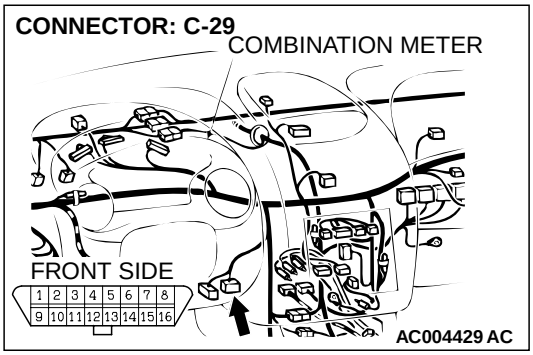

Q: Is any of the harness wires between the ABS-ECU connector A-02 (terminals 11 and 12) and the data link connector C-29 (terminals 1 and 7) damaged?

YES : Repair it and go to Step 5.

NO : Go to Step 4.

STEP 4. Check the harness wires between ABS-ECU connector A-02 (terminals 16 and 19) and ground.

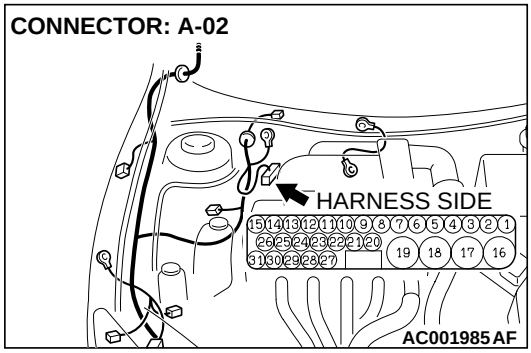

Q: Are any harness wires between ABS-ECU connector A-02 (terminals 16 and 19) and ground damaged?

YES : Repair them and then go to Step 5.

NO : Go to Step 5.

STEP 5. Check symptom.

Q: Does the scan tool communicate with the ABS system?

YES : This diagnosis is complete.

NO : Return to Step 1.

INSPECTION PROCEDURE 2: When the Ignition Key is Turned to the "ON" Position (Engine Stopped), the ABS Warning Light does not Illuminate.

ABS Warning Light Circuit

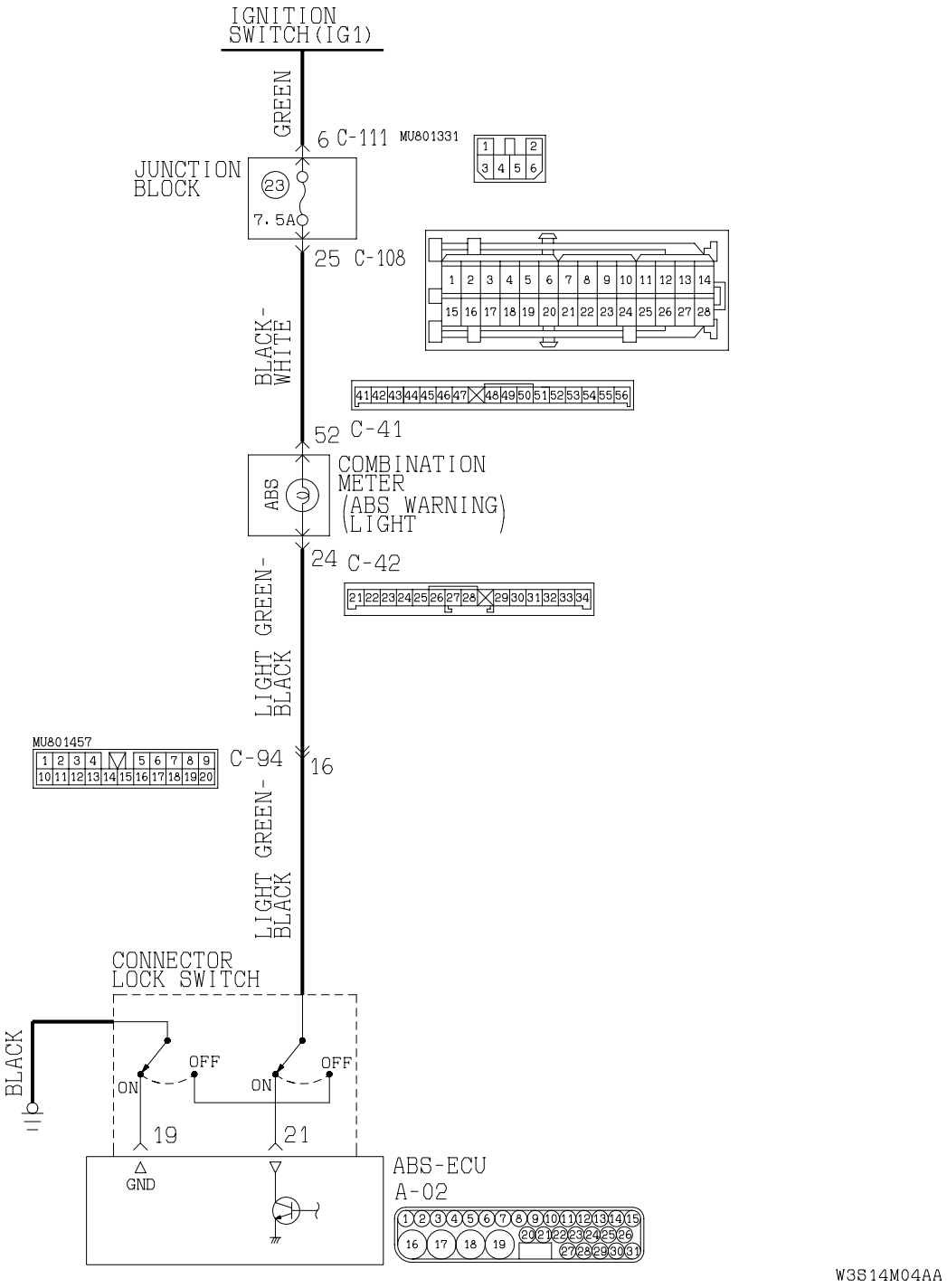

NOTE: CONNECTOR LOCK SWITCH

ON: The ABS-ECU connector A-02 is connected.

OFF: The ABS-ECU connector A-02 is disconnected.

TSB Revision

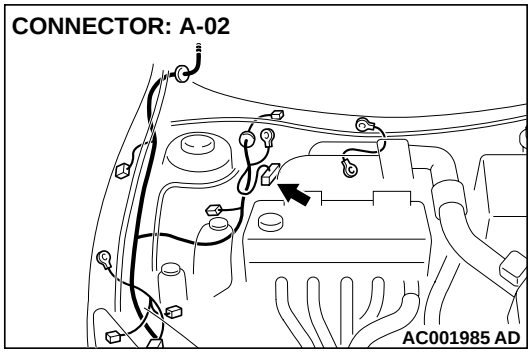

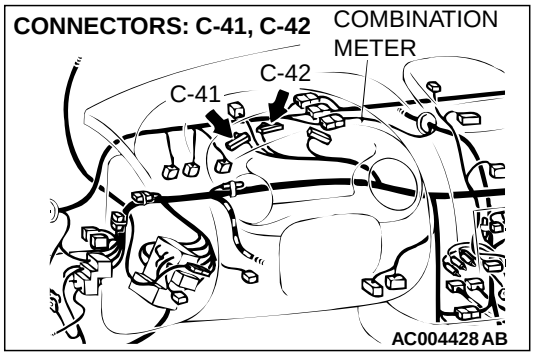

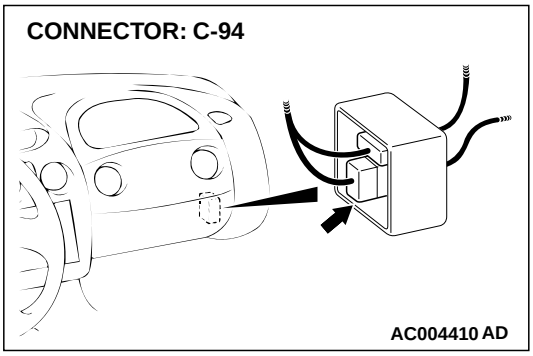

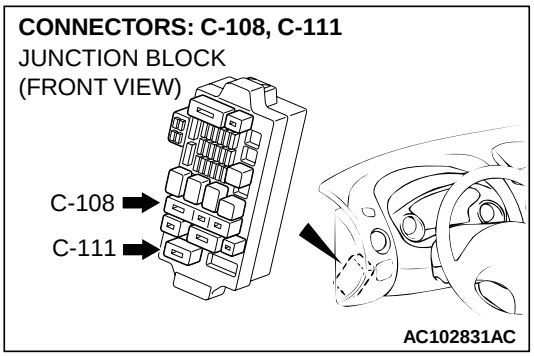

CIRCUIT OPERATION

- The ABS warning light power is supplied from the ignition switch. The ABS-ECU grounds the circuit to illuminate the light.
- The ABS-ECU illuminates the ABS warning light for 3 seconds while running self-check. This light can be illuminated for 3 seconds upon start-up or when the ignition switch is turned to the "ON" position with engine stopped.
- When the ABS-ECU connector is disconnected, the circuit is grounded to illuminate the light by the connector lock switch OFF operation.

TECHNICAL DESCRIPTION (COMMENT)

The cause may be: an open circuit in the ABS warning light power supply circuit, a blown ABS warning light bulb, or malfunction of the ABS-ECU.

TROUBLESHOOTING HINTS (The most likely causes for this case:)

- Blown fuse
- Damaged wiring harness or connector
- Burnt out ABS warning light bulb
- Malfunction of the hydraulic unit (integrated with ABS-ECU)

DIAGNOSIS

Required Special Tool:

- MB991223: Harness Set

STEP 1. Check the ABS warning light circuit at the ABS-ECU connector A-02.

(1) Disconnect the ABS-ECU connector A-02.
(2) Turn the ignition switch to the "ON" position.

Q: Does the ABS warning light illuminate?

YES : Replace the hydraulic unit (integrated with ABS-ECU) and then go to Step 9.
NO : Go to Step 2.

STEP 2 Check the ABS warning light bulb.

(1) Remove the combination meter (Refer to GROUP 54A, Combination Meter P.54A-105 and P.54A-107.)
(2) Check the ABS warning light bulb.

Q: Is the bulb burned out?

YES : Replace the bulb and then go to Step 9.
NO : Go to Step 3.

STEP 3. Check the combination meter for continuity.

(1) Remove the combination meter.
(2) Remove the ABS warning light bulb. Then measure the resistance between the bulb terminals.
(3) Install the ABS warning light bulb to the combination meter, and then measure the resistance between connector C-41 terminal 52 and connector C-42 terminal 24. The resistance reading at this time should be much the same as the resistance measured at step (2).

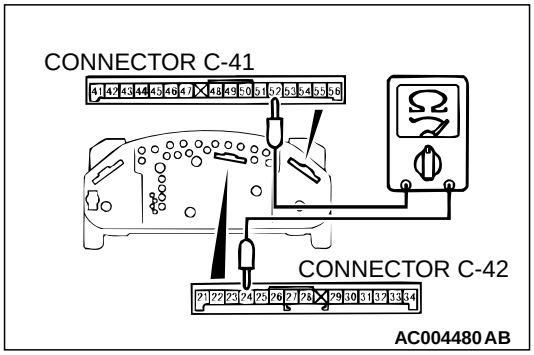

Q: Are the two resistance values extremely different each other?

YES : Replace the combination meter (printed circuit board) and then go to Step 9.
NO : Go to Step 4.

STEP 4. Check the combination meter power supply circuit.

(1) Disconnect connector C-41, and check at the harness side.
(2) Turn the ignition switch to the "ON" position.
(3) Measure the voltage between terminal 52 and ground. It should be approximately 12 volts (battery positive voltage).

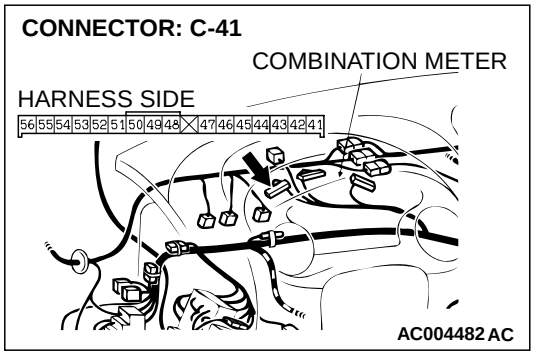

Q: Is the voltage approximately 12 volts (battery positive voltage)?

YES : Go to Step 5.
NO : Go to Step 7.

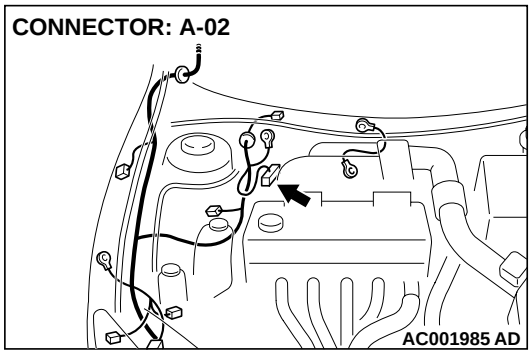

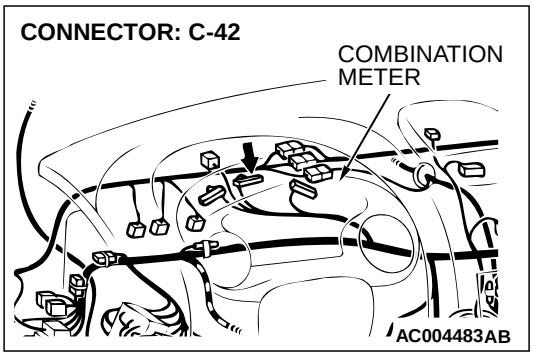

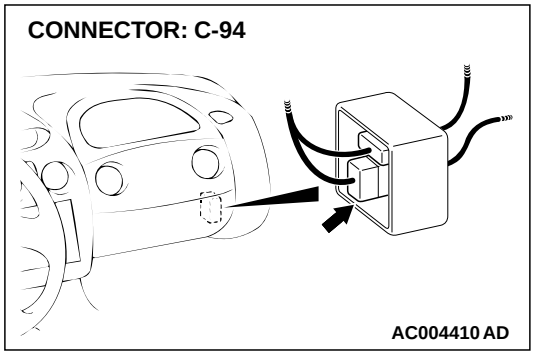

STEP 5. Check the connectors A-02, C-42, and C-94.

Refer to GROUP 00E, Harness Connector Inspection P.00E-2.

Q: Is any of the connectors damaged?

YES : Repair it and then go to Step 9.

NO : Go to Step 6.

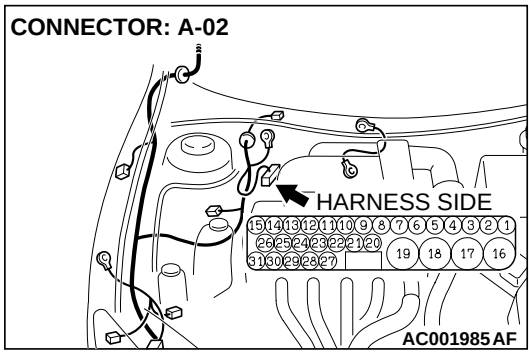

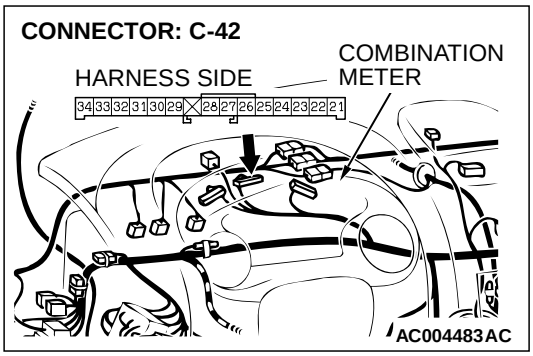

STEP 6. Check the continuity between the combination meter and the ABS-ECU.

Check the continuity between the combination meter connector C-42 (terminal 24) and the ABS-ECU connector A-02 (terminal 21).

NOTE: This check must be done with the ABS-ECU connector A-02 is connected to the ABS-ECU. Disconnection of the ABS-ECU connector A-02 makes the connector lock switch OFF, so this continuity check could not be done.

Q: Is there the continuity between the combination meter connector C-42 (terminal 24) and the ABS-ECU connector A-02 (terminal 21)?

YES : Go to Step 9.

NO : Repair the harness wire and then go to Step 9.

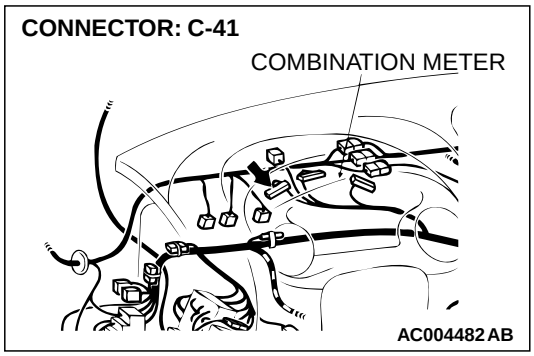

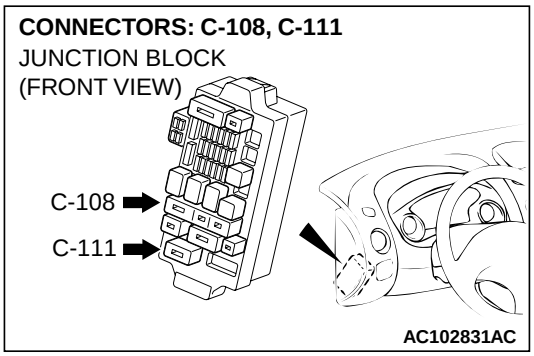

STEP 7. Check the connectors C-41, C-108, and C-111.

Refer to GROUP 00E, Harness Connector Inspection P.00E-2.

Q: Is any of the connectors damaged?

YES : Repair it and then go to Step 9.

NO : Go to Step 8.

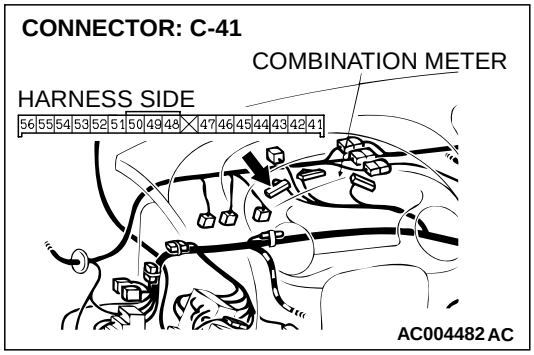

STEP 8. Check the continuity between the ignition switch (IG1) and the combination meter.

Q: Is there any continuity (less than 2 ohm) between the ignition switch (IG1) and the combination meter connector C-41 (terminal 52)?

YES : Go to Step 9.

NO : Repair the harness wire and then go to Step 9.

STEP 9. Check symptom.

Q: Does the ABS warning light illuminate for 3 seconds when the ignition switch is turned to the "ON" position with engine stopped or upon start-up?

YES : This diagnosis is complete.

NO : Return to Step 1.

INSPECTION PROCEDURE 3: The ABS Warning Light Remains Illuminated after the Engine is Started.

NOTE: This diagnosis procedure is limited to cases where communication with the scan tool is possible (ABS-ECU power supply is normal) and no diagnostic trouble code outputs.

ABS Warning Light Circuit

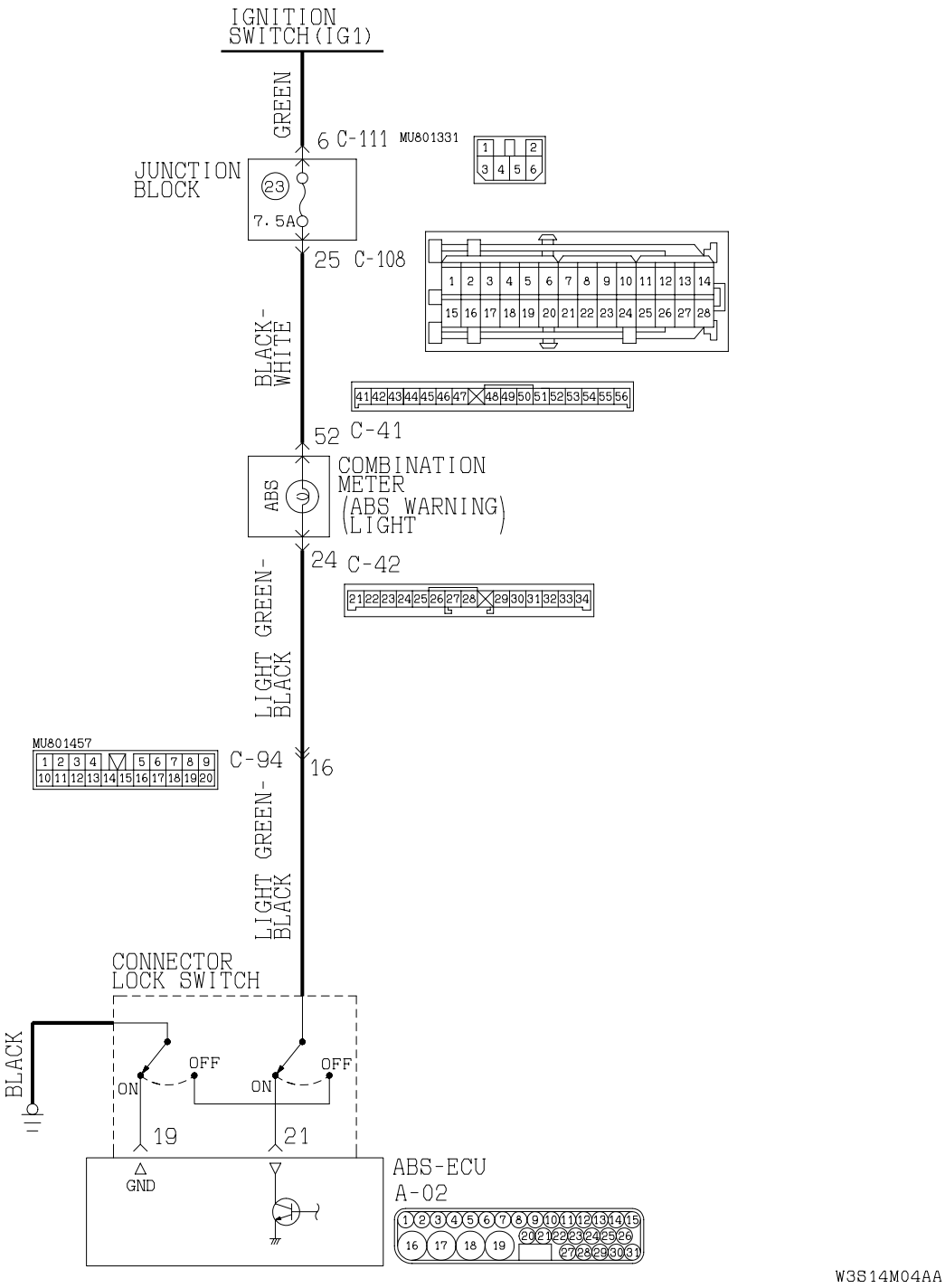

NOTE: CONNECTOR LOCK SWITCH

ON: The ABS-ECU connector A-02 is connected.

OFF: The ABS-ECU connector A-02 is disconnected.

TSB Revision

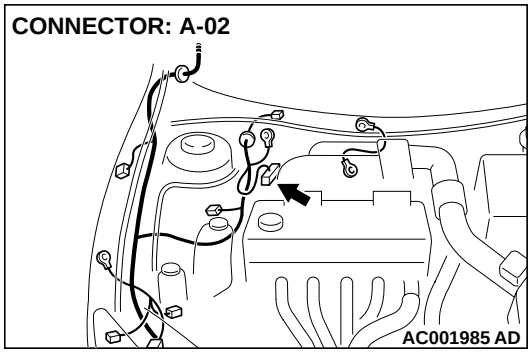

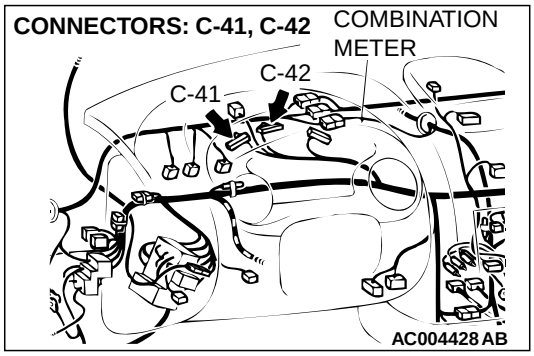

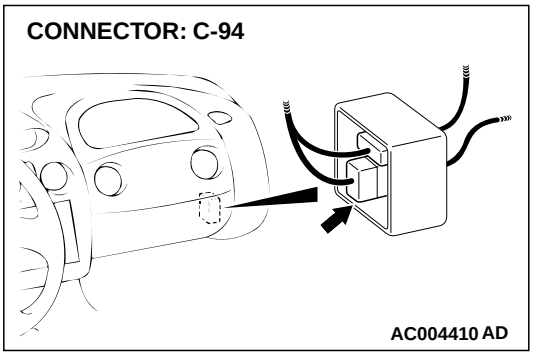

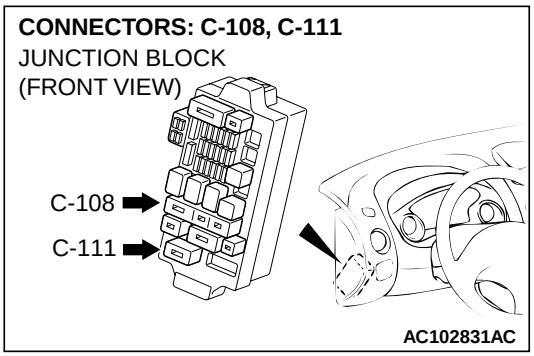

CIRCUIT OPERATION

- The ABS-ECU controls the illumination of the ABS warning light by turning the power transistor in the ABS-ECU ON and OFF.
- The ABS-ECU illuminates the ABS warning light on start-up. It turns the light off after 3 seconds when the ABS-ECU completes the self-check.
- When the ABS-ECU connector is disconnected, the circuit is grounded to illuminate the light by the connector lock switch OFF operation.

TECHNICAL DESCRIPTION (COMMENT)

The cause is probably the ABS-ECU malfunction.

TROUBLESHOOTING HINTS (The most likely causes for this condition:)

- Malfunction of the ABS-ECU connector lock
- Disconnection of the ABS-ECU connector
- Damaged wiring harness or connector
- Malfunction of the hydraulic unit (integrated with ABS-ECU)

DIAGNOSIS

Confirm the ABS-ECU connector connection and locking. If the connector is connected and locked to the ABS-ECU correctly, perform the following diagnosis.

Required Special Tool:

- MB991223: Harness Set

STEP 1. Check the ABS warning light circuit at the intermediate connector C-94.

(1) Disconnect the intermediate connector C-94.
(2) Turn the ignition switch to the "ON" position.

Q: Does the ABS warning light illuminate?

YES : Go to Step 4.
NO : Go to Step 2.

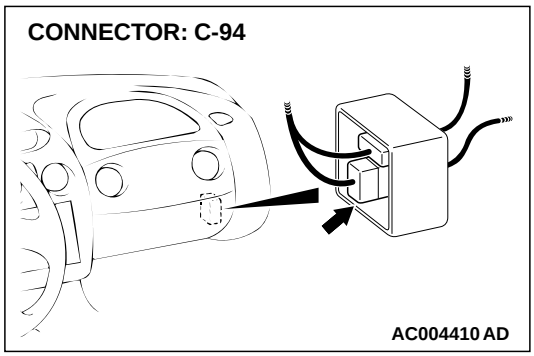

STEP 2. Check the following connectors: the ABS-ECU connector A-02 and the intermediate connector C-94.

Q: Is any of the connectors damaged?

YES : Repair it and then go to Step 6.
NO : Go to Step 3.

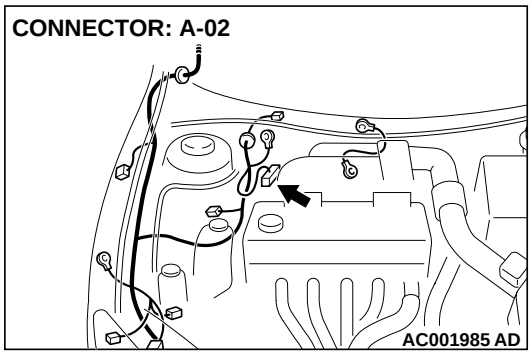

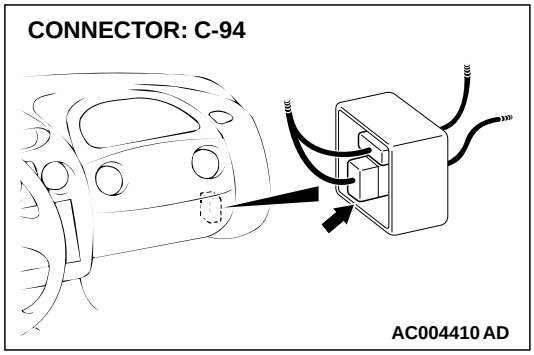

STEP 3. Check the harness wire between the ABS-ECU connector A-02 (terminal 21) and the intermediate connector C-94 (terminal 16).

Q: Is the harness wire between the ABS-ECU connector A-02 (terminal 21) and the intermediate connector C-94 (terminal 16) damaged?

YES : Repair it and then go to Step 6.

NO : Replace the hydraulic unit (integrated with ABS-ECU) (Refer to P.35B-52.) and then go to Step 6.

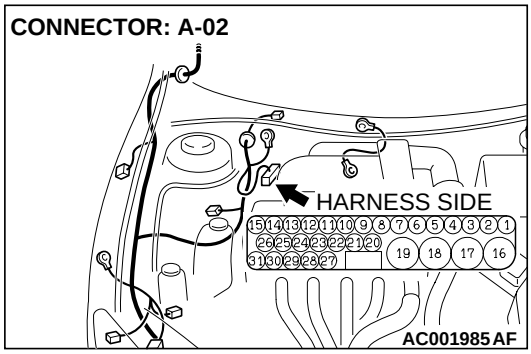

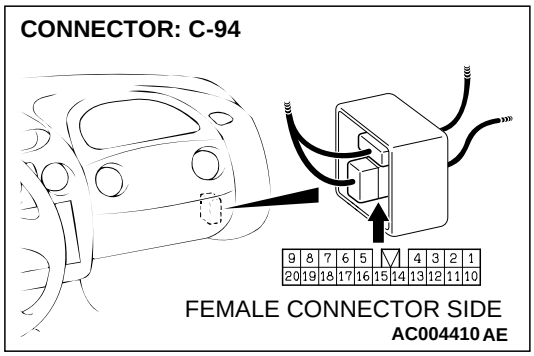

STEP 4. Check the following connectors: the combination meter connector C-42 and the intermediate connector C-94.

Q: Is any of the connectors damaged?

YES : Repair it and then go to Step 6.

NO : Go to Step 5.

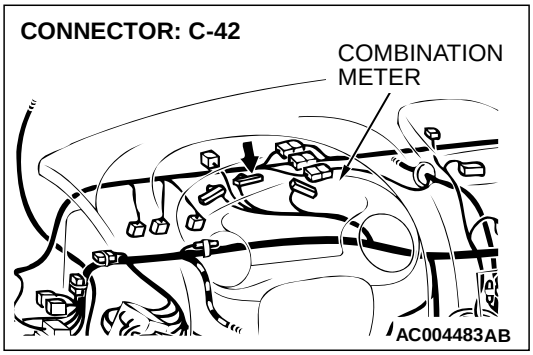

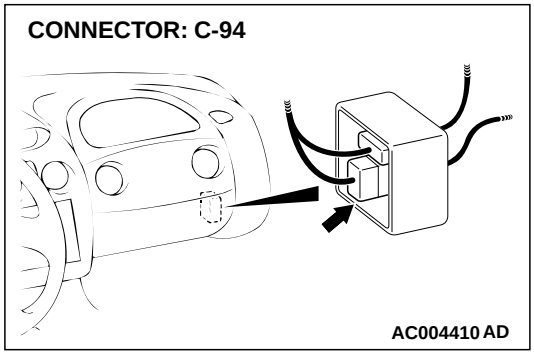

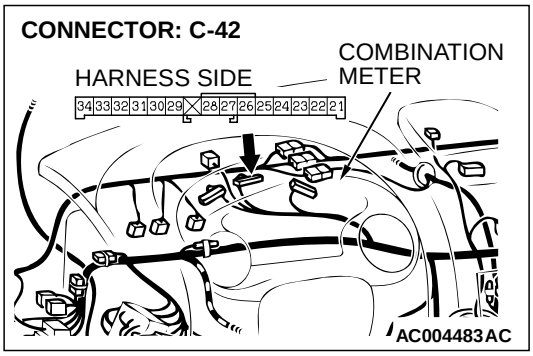

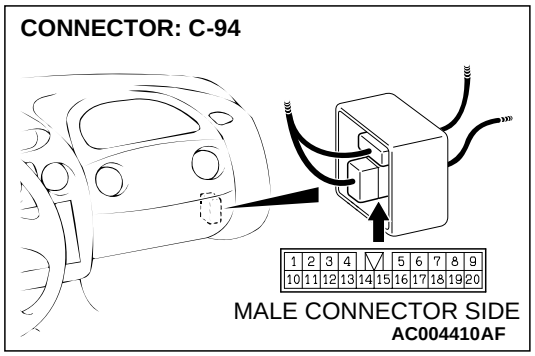

STEP 5. Check the harness wire between the combination meter connector C-42 (terminal 24) and the intermediate connector C-94 (terminal 16).

Q: Is the harness wire between the combination meter connector C-42 (terminal 24) and the intermediate connector C-94 (terminal 16) damaged?

YES : Repair it and then go to Step 6.

NO : Replace the combination meter (printed circuit board) (Refer to GROUP 54A, Combination Meter P.54A-105 and P.54A-107.) and then go to Step 6.

STEP 6. Check symptom.

Q: Does the ABS warning light turn off 3 seconds after start-up?

YES : This diagnosis is complete.

NO : Return to Step 1.

INSPECTION PROCEDURE 4: Faulty ABS Operation

TECHNICAL DESCRIPTION (COMMENT)

The cause depends on driving and road surface conditions, so diagnosis may be difficult. However, if no diagnostic trouble code is displayed, carry out the following inspection.

TROUBLESHOOTING HINTS (The most likely causes for this case:)

- Malfunction of the hydraulic unit

DIAGNOSIS

Check the hydraulic unit. (Refer to P.35B-47.) If the hydraulic unit (integrated with ABS-ECU) is malfunctioning, replace it. Then check that the malfunction symptom is eliminated.

DATA LIST REFERENCE TABLE

M1352011500285

The following items can be read by the scan tool from the ABS-ECU input data.

MUT-II SCAN TOOL DISPLAY	ITEM NO.	CHECK ITEM	CHECKING REQUIREMENTS	NORMAL VALUE
FR SNSR	11	Front-right wheel speed sensor	Drive the vehicle	Vehicle speeds displayed on the speedometer and scan tool are identical.
FL SNSR	12	Front-left wheel speed sensor		
RR SNSR	13	Rear-right wheel speed sensor		
RL SNSR	14	Rear-left wheel speed sensor		
BATT. VOLTAGE	16	ABS-ECU power supply voltage	Ignition switch power supply voltage and valve monitor voltage	9 – 16 V
STOPLIGHT SW	36	Stoplight switch	Depress the brake pedal.	ON
			Release the brake pedal.	OFF

ACTUATOR TEST REFERENCE TABLE

M1352011600260

The scan tool activates the following actuators for testing.

NOTE: If the ABS-ECU is inoperative, actuator testing cannot be carried out.

NOTE: Actuator testing is only possible when the vehicle is stationary. If the vehicle speed during actuator testing exceeds 10 km/h (6 mph), forced actuation will be canceled.

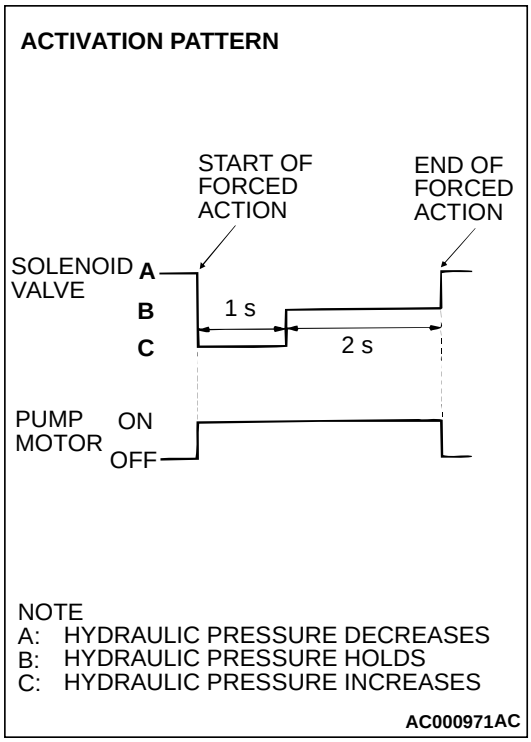

ACTUATOR TEST SPECIFICATIONS

NO.	ITEM	PARTS TO BE ACTIVATED
01	Solenoid valve for front-left wheel	Solenoid valves and pump motors in the hydraulic unit (simple inspection mode)
02	Solenoid valve for front-right wheel	
03	Solenoid valve for rear-left wheel	
04	Solenoid valve for rear-right wheel	

CHECK AT ABS-ECU

M1352011800286

TERMINAL VOLTAGE CHECK CHART

1. Measure the voltages between terminals (16) and (19) (ground terminals) and each respective terminal.
2. The terminal layouts are shown in the illustrations below.

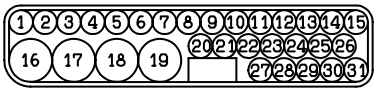

AC002089 AB

NOTE: Do not measure terminal voltage for approximately three seconds after the ignition switch is turned to the "ON" position. The ABS-ECU performs the initial check during that period.

CONNECTOR TERMINAL NO	SIGNAL	CHECKING REQUIREMENT	NORMAL CONDITION
14	Input from stoplight switch	Stoplight switch: ON	Battery positive voltage
		Stoplight switch: OFF	Approximately 0 V
15	ABS-ECU power supply	Ignition switch: "ON"	Battery positive voltage
17	Motor power supply	Always	Battery positive voltage
18	Solenoid valve power supply	Always	Battery positive voltage

RESISTANCE AND CONTINUITY BETWEEN HARNESS-SIDE CONNECTOR TERMINALS

1. Turn the ignition switch to the "LOCK" (OFF) position and disconnect the ABS-ECU connector before checking resistance and continuity.
2. Check between the terminals indicated in the table below.
3. The terminal layouts are shown in the illustration below.

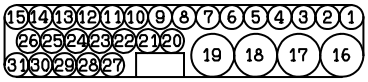

AC002090 AB

CONNECTOR TERMINAL NO.	SIGNAL	NORMAL CONDITION
6 – 7	Front-left wheel speed sensor	1.28 – 1.92 kΩ
1 – 3	Rear-right wheel speed sensor	1.28 – 1.92 kΩ
4 – 5	Front-right wheel speed sensor	1.28 – 1.92 kΩ
8 – 9	Rear-left wheel speed sensor	1.28 – 1.92 kΩ
16 – body ground	Solenoid valve ground	Less than 2 ohms

SPECIAL TOOLS

M1352000600288

TOOL	TOOL NUMBER AND NAME	SUPERSESSION	APPLICATION
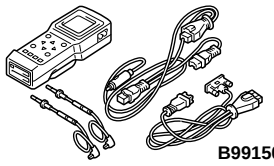 B991502	MB991502 Scan tool (MUT-II)	MB991496-OD	For checking of ABS (Diagnostic trouble code display when using the scan tool)
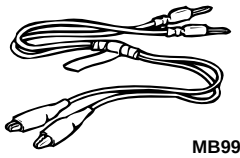 MB991529	MB991529 Diagnostic trouble code check harness	Tool not necessary if scan tool (MUT-II) is available.	For checking of ABS (Diagnostic trouble code display when using the ABS warning light)
A B C D 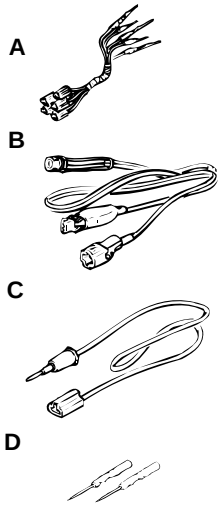 MB991223AB	MB991223 Harness set A: MB991219 Inspection harness B: MB991220 LED harness C: MB991221 LED harness adaptor D: MB991222 Probe	MB991223 MB991709-01	Making voltage and resistance measurement during troubleshooting A: Connector pin contact B: Power circuit inspection C: Power circuit inspection D: Commercial tester connection

ON-VEHICLE SERVICE

BLEEDING

M1352001500165

⚠ CAUTION

Use the specified brake fluid. Avoid using a mixture of the specified brake fluid and other fluid.

Specified brake fluid: Conforming to DOT 3 or DOT 4

MASTER CYLINDER BLEEDING

Refer to GROUP 35A – On-vehicle Service – Bleeding P.35A-21.

BRAKE LINE BLEEDING

⚠ CAUTION

Be sure to filter/strain the brake fluid being added to the master cylinder reservoir tank. Debris may damage the hydraulic unit.

Refer to GROUP 35A – On-vehicle Service – Bleeding P.35A-21.

WHEEL SPEED SENSOR OUTPUT VOLTAGE MEASUREMENT

M1352001600225

Required Special Tool:

MB991219: Inspection Harness

1. Lift up the vehicle and release the parking brake.
2. Disconnect the ABS-ECU connector, and then use special tool MB991219 to measure the output voltage at the harness side connector.

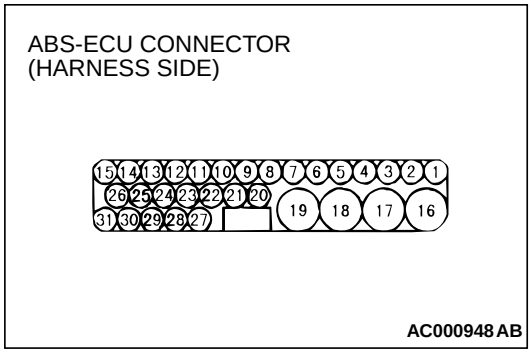

TERMINAL NO.			
Front left	Rear right	Front right	Rear left
6	1	4	8
7	3	5	9

3. Manually turn the wheel to be measured 1/2 to 1 turn/ second. Measure the output voltage with a voltmeter or oscilloscope.

   NOTE: Check the connection of the sensor harness and connector before using the oscilloscope.

Output voltage:

- Minimal voltmeter reading: 42 mV
- Maximum voltmeter reading: 300 mV
- Minimal oscilloscope reading: 120 mV
- Maximum oscilloscope reading: 600 mV

Probable causes of low output voltage

- Wheel speed sensor pole piece-to-ABS rotor clearance too large
- Faulty wheel speed sensor

4. To observe the waveform with an oscilloscope:
   - Front Wheels: Shift into low gear and drive the wheels.
   - Rear Wheels: Turn the wheels manually at a constant speed

   NOTE: The output waveform is low when the wheel speed is low. Similarly, it will be higher as the wheel speed increases. Waveform may also be observed by driving the vehicle.

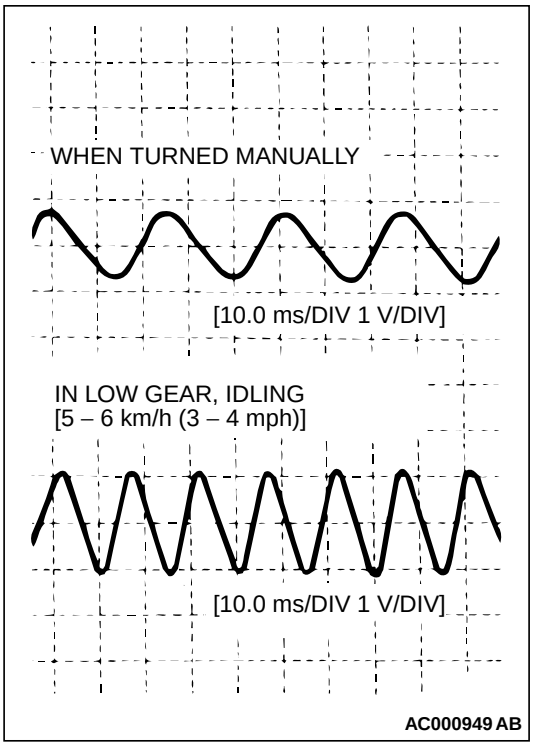

POINTS IN WAVEFORM MEASUREMENT

SYMPTOM	PROBABLE CAUSES	REMEDY
Too small or zero waveform amplitude	Faulty wheel speed sensor	Replace sensor
	Incorrect pole piece-to-ABS rotor clearance	Adjust clearance
Waveform amplitude fluctuates excessively (This is no problem if the minimum amplitude is 100 mV or more)	Axle hub eccentric or with large runout	Replace hub
Noisy or disturbed waveform	Open circuit in wheel speed sensor	Replace sensor
	Open circuit in harness	Repair harness
	Incorrectly mounted wheel speed sensor	Mount correctly
	ABS rotor with missing or damaged teeth	Replace ABS rotor

NOTE: The wheel speed sensor cable moves in relation to motion of the front or rear suspension. Therefore, it is likely that it has an open circuit only when driving on rough roads but it functions normally when driving on smooth roads. It is recommended to observe sensor output voltage waveform also under special conditions, such as driving on a rough road.

HYDRAULIC UNIT CHECK

M1352001700233

Required Special Tool:
MB991502: Scan Tool (MUT-II)

⚠ CAUTION

- **The roller of the braking force tester and the tire should be dry during testing.**
- **When testing the front brakes, apply the parking brake. When testing the rear brakes, stop the front wheels with chocks.**

1. Jack up the vehicle. Then support the vehicle with rigid racks at the specified jack-up points or place the front or rear wheels on the rollers of the braking force tester.
2. Release the parking brake, and feel the drag force (drag torque) on each road wheel. When using the braking force tester, take a reading of the brake drag force.

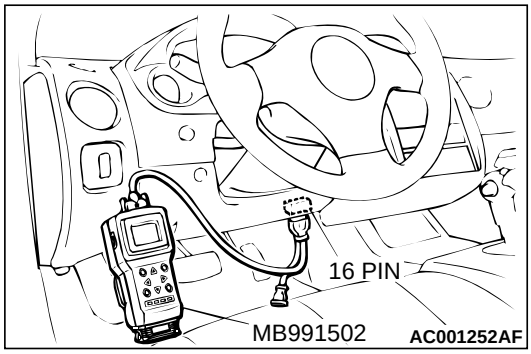

⚠ CAUTION

To prevent damage to scan tool MB991502, always turn the ignition switch to the "LOOK" (OFF) position before connecting or disconnecting scan tool MB991502.

3. Turn the ignition switch to the "LOCK" (OFF) position and set scan tool MB991502 as shown in the illustration.
4. After checking that the shift lever <M/T> or the selector lever <A/T> is in neutral, start the engine.
5. Use scan tool MB991502 to force-drive the actuator.

   NOTE: The ABS system will switch to the scan tool mode and the ABS warning light will illuminate.

   NOTE: When the ABS has been interrupted by the fail-safe function, scan tool MB991502 actuator testing cannot be used.

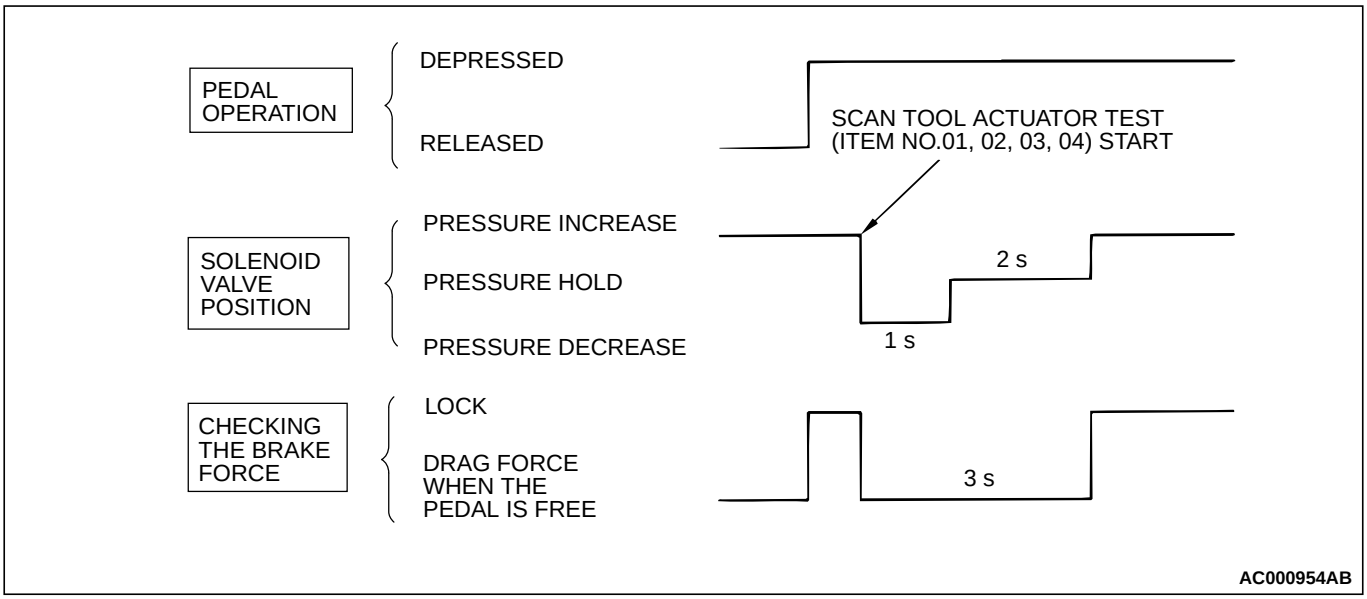

6. Turn the wheel by hand and check the change in braking force when the brake pedal is depressed. When using the braking force tester, depress the brake pedal until the braking force is at the following values, and check that the braking force changes to the brake drag force inspected in step 2 when the actuator is force-driven. The result should be as shown in the diagram above.

Front wheel	785 – 981 N (176 – 220 lb.)
Rear wheel	588 – 784 N (132 – 176 lb.)

7. If the result of inspection is abnormal, repair according to the Diagnosis Table below.

DIAGNOSIS TABLE					
NO.	**OPERATION**	**TEST RESULTS**	**JUDGMENT**	**PROBABLE CAUSE**	**REMEDY**
01 02 03 04	1. Depress brake pedal to lock wheel. 2. Using scan tool MB991502, select the wheel to be checked and force the actuator to operate. 3. Turn the selected wheel manually to check the change of brake force.	Brake force released for three locking.	Normal	–	–
		Wheel does not lock when brake pedal is depressed.	Abnormal	Clogged brake line other than hydraulic unit	Check and clean brake line
				Clogged hydraulic circuit in hydraulic unit	Replace hydraulic unit
		Brake force is not released		Incorrect hydraulic unit brake tube connection	Connect correctly
				Hydraulic unit solenoid valve not functioning correctly	Replace hydraulic unit

8. After inspection, disconnect the scan tool immediately after turning the ignition switch to the "LOCK" (OFF) position.

DISCHARGED BATTERY

M1352003500257

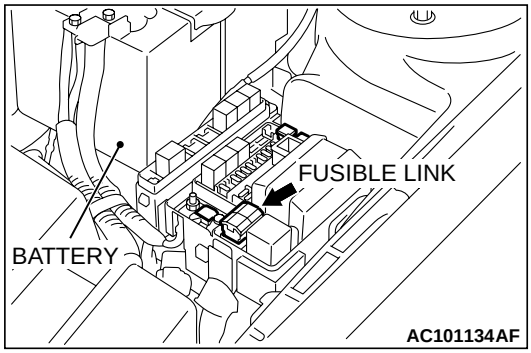

The ABS system consumes a large amount of battery current for its self-check function. If the battery is completely discharged and booster cables are used to start the engine, the engine must be allowed to idle for a few minutes to recharge. If the battery does not recharge, the engine may misfire or stall. To prevent this condition, allow the engine to idle for a few minutes before driving the vehicle, or temporarily disable the ABS system by removing the fusible link for the ABS circuit. The ABS warning light will illuminate when the ABS fusible link is removed. After the battery is recharged, reinstall the ABS fusible link and check that the ABS warning light is not illuminated.

MASTER CYLINDER AND BRAKE BOOSTER

REMOVAL AND INSTALLATION

M1352004000158

Refer to GROUP 35A, Master Cylinder and Brake Booster P.35A-32.

MASTER CYLINDER

M1352004500153

DISASSEMBLY AND ASSEMBLY

⚠ CAUTION

Do not disassemble the primary and secondary piston assemblies.

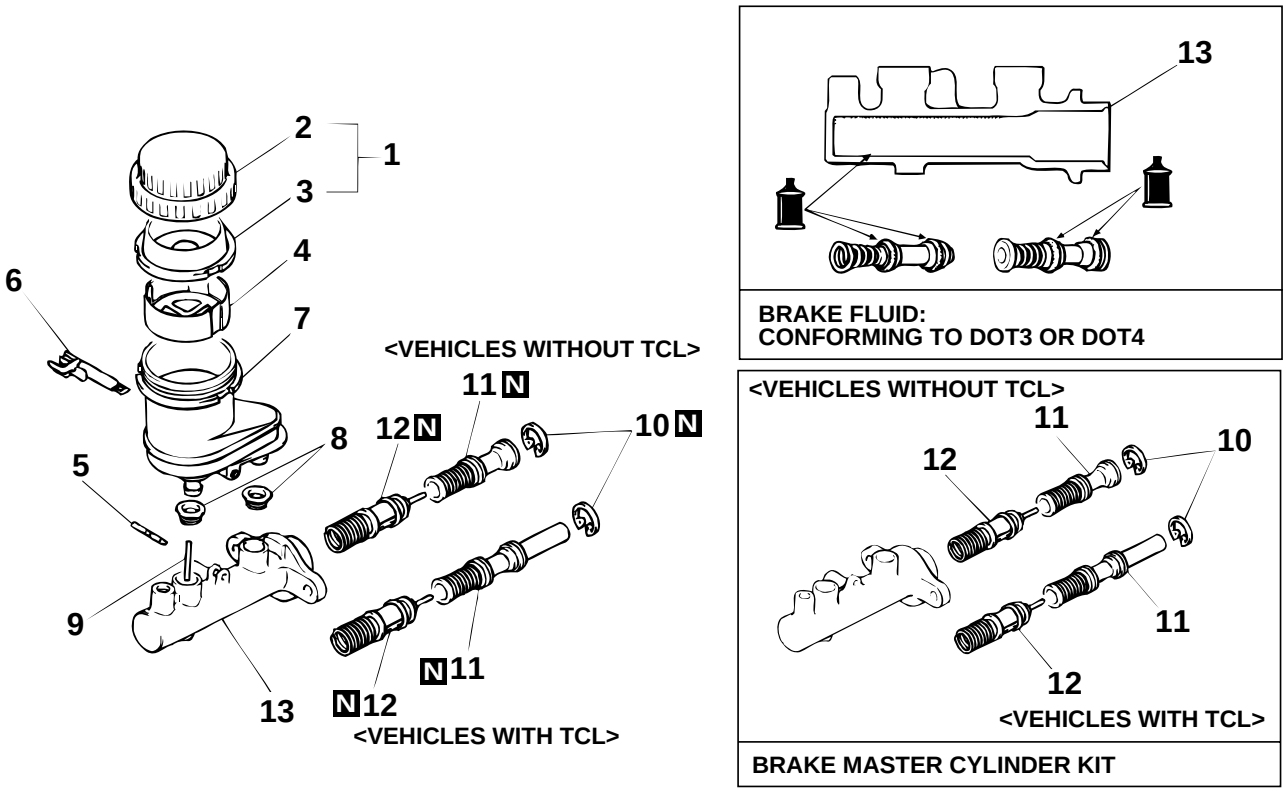

AC000955AC

DISASSEMBLY STEPS

1. RESERVOIR CAP ASSEMBLY
2. RESERVOIR CAP
3. DIAPHRAGM
4. FILTER
5. SPRING PIN
6. BRAKE FLUID LEVEL SENSOR
7. RESERVOIR

<<A>>

DISASSEMBLY STEPS (Continued)

8. RESERVOIR SEAL
9. PIN
10. PISTON STOPPER RING
11. PRIMARY PISTON ASSEMBLY
12. SECONDARY PISTON ASSEMBLY
13. MASTER CYLINDER BODY

DISASSEMBLY SERVICE POINT

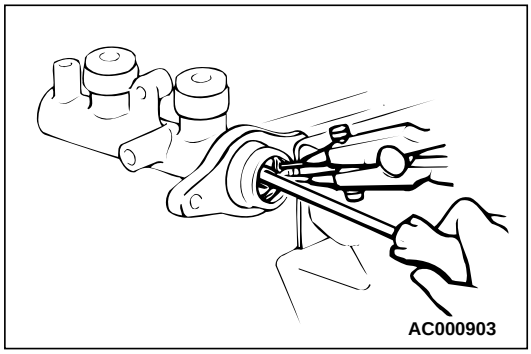

<<A>> PISTON STOPPER RING DISASSEMBLY

While depressing the piston, remove the piston stopper ring.

INSPECTION

M1352004600127

- Check the inner surface of the master cylinder body for corrosion or pitting.
- Check the primary and secondary pistons for corrosion, scoring, wear or damage.
- Check the diaphragm for cracks and wear.

HYDRAULIC UNIT

REMOVAL AND INSTALLATION

M1352008600215

<2.4L ENGINE>

NOTE: The ABS-ECU is integrated in the hydraulic unit.

Pre-removal Operation	Post-installation Operation
• Strut Tower Bar Removal <Vehicles with Strut Tower Bar> (Refer to GROUP 42, Strut Tower Bar P.42-11.) • Brake Fluid Draining	• Brake Fluid Filling • Bake Line Bleeding (Refer to P.35B-45.) • Strut Tower Bar Installation <Vehicles with Strut Tower Bar> (Refer to GROUP 42, Strut Tower Bar P.42-11.)

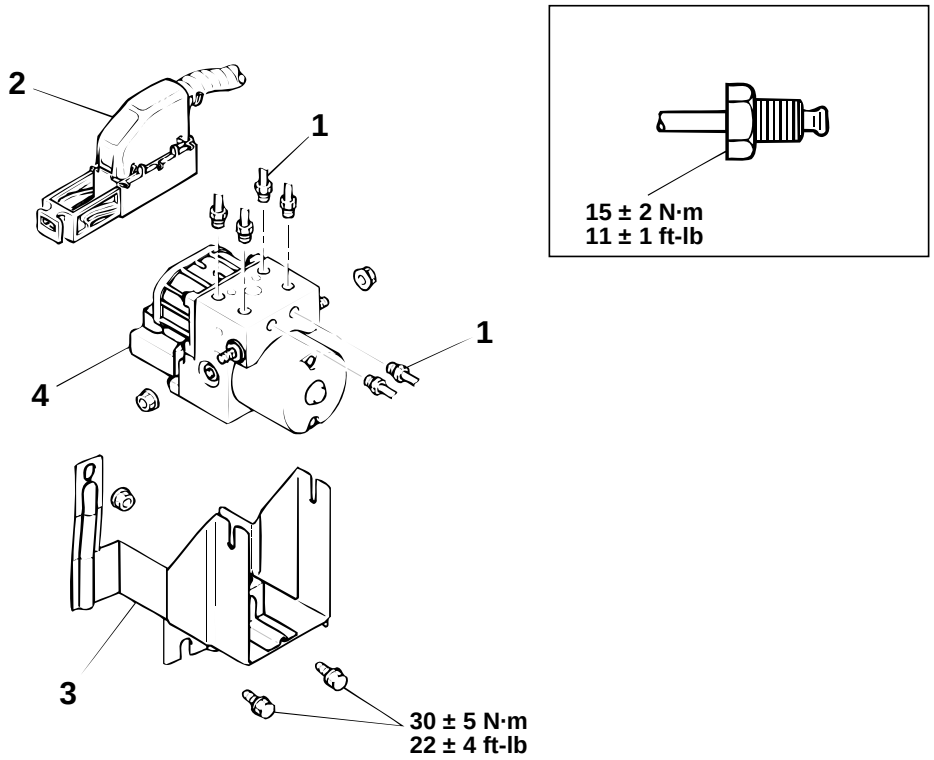

AC000956 AB

REMOVAL STEPS

>>A<< 1. BRAKE TUBE

<<A>> 2. HARNESS CONNECTOR

REMOVAL STEPS (Continued)

3. BRACKET ASSEMBLY

<<C>> 4. HYDRAULIC UNIT

<3.0L ENGINE>

NOTE: The ABS-ECU is integrated in the hydraulic unit.

Pre-removal Operation	Post-installation Operation
• Strut Tower Bar Removal <Vehicles with Strut Tower Bar> (Refer to GROUP 42, Strut Tower Bar P.42-11.) • Intake Manifold Plenum Removal (Refer to GROUP 15, Intake Manifold Plenum P.15-7.) • Brake Fluid Draining	• Brake Fluid Filling • Bake Line Bleeding (Refer to P.35B-45.) • Intake Manifold Plenum Installation (Refer to GROUP 15, Intake Manifold Plenum P.15-7.) • Strut Tower Bar Installation <Vehicles with Strut Tower Bar> (Refer to GROUP 42, Strut Tower Bar P.42-11.)

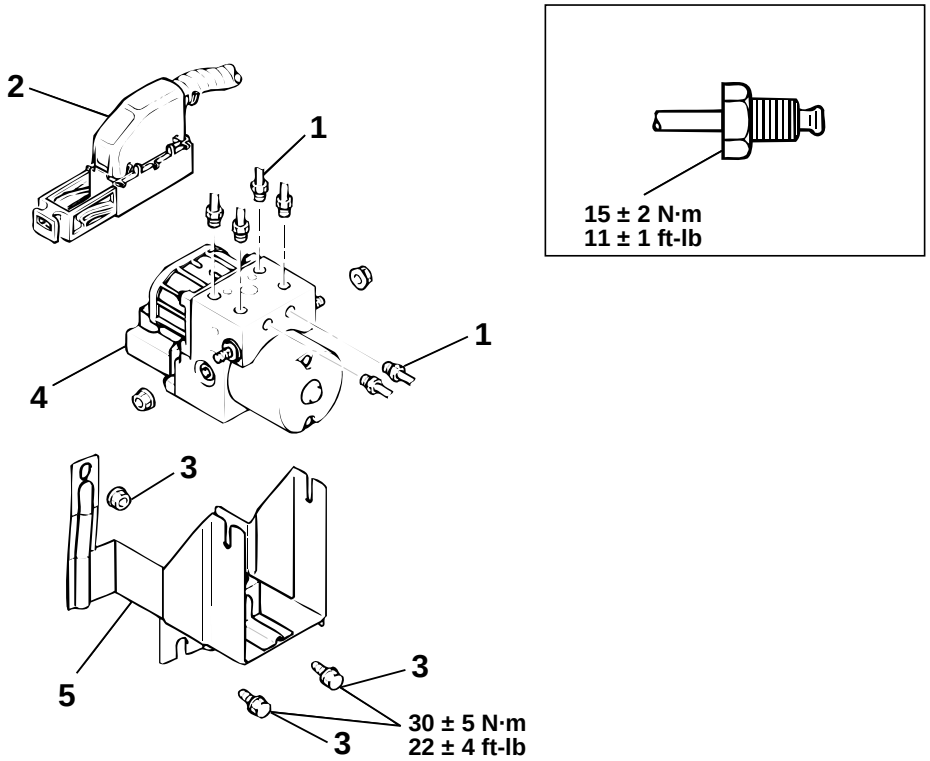

AC000956 AC

REMOVAL STEPS

>>A<< 1. BRAKE TUBE
<<A>> 2. HARNESS CONNECTOR
<<B>> • BRAKE TUBE (FRONT RH) CLAMP

REMOVAL STEPS (Continued)

<<C>> 3. BRACKET BOLT AND NUT
4. HYDRAULIC UNIT
5. BRACKET ASSEMBLY

REMOVAL SERVICE POINTS

<<A>> HARNESS CONNECTOR REMOVAL

Pull the lock lever in the direction shown in the illustration, and remove the harness.

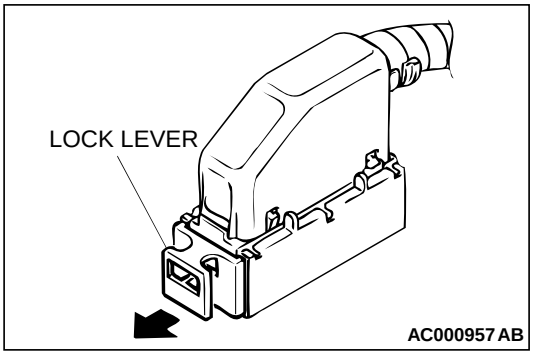

AC000957 AB

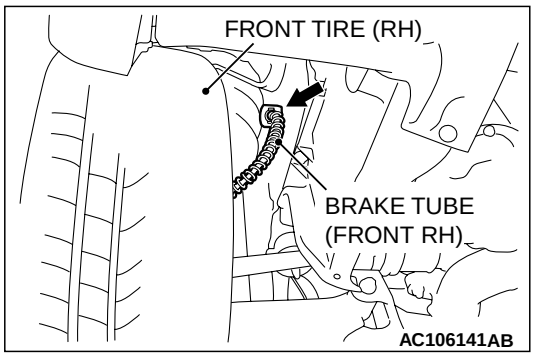

<<B>> BRAKE TUBE (FRONT RH) CLAMP REMOVAL

Release the clamp (arrow) from the vehicle body, and move the brake tube aside to the wheel house in order to make room for the hydraulic unit removal.

<<C>> HYDRAULIC UNIT REMOVAL

⚠ *WARNING*

The hydraulic unit is heavy. Use care when removing it.

⚠ CAUTION

- **The hydraulic unit cannot be disassembled. Never loosen its nuts or bolts.**
- **Do not drop or shock the hydraulic unit.**
- **Do not turn the hydraulic unit upside down or lay it on its side.**

INSTALLATION SERVICE POINT

>>A<< BRAKE TUBE INSTALLATION

Connect the tubes to the hydraulic unit as shown in the illustration.

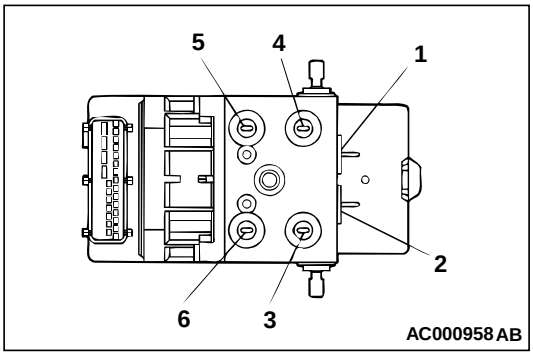

1. To the proportioning valve (rear brake: LH)
2. To the proportioning valve (rear brake: RH)
3. From the master cylinder (primary)
4. From the master cylinder (secondary)
5. To the front brake (RH)
6. To the front brake (LH)

WHEEL SPEED SENSOR

REMOVAL AND INSTALLATION

M1352008300247

Post-installation Operation
- Wheel Speed Sensor Output Voltage Measurement (Refer to P.35B-46.)

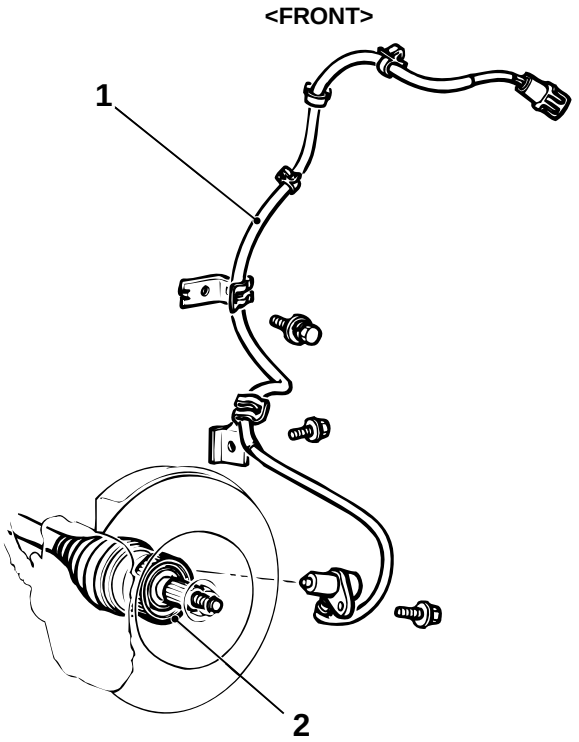

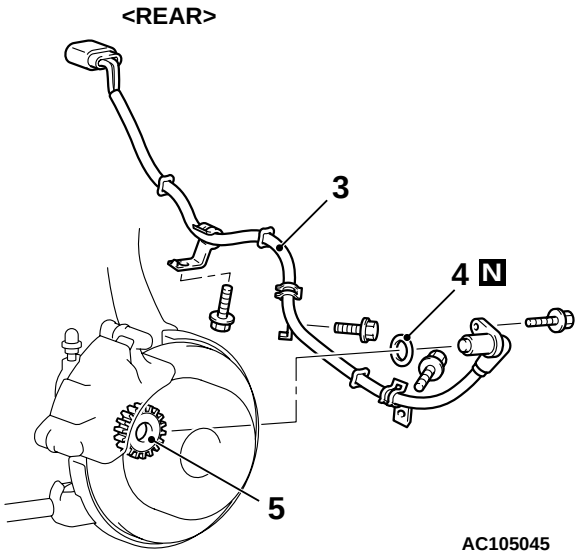

AC106419 AB

REMOVAL STEPS

<<A>> >>A<< 1. FRONT SPEED SENSOR
2. FRONT ABS ROTOR WITH DRIVESHAFT (REFER TO GROUP 26, DRIVESHAFT P.26-11.)

REMOVAL STEPS (Continued)

<<A>> >>A<< 3. REAR SPEED SENSOR
4. O-RING
5. REAR ABS ROTOR (REFER TO GROUP 27, REAR AXLE HUB P.27-6.)

REMOVAL SERVICE POINT

<<A>> FRONT SPEED SENSOR/REAR SPEED SENSOR REMOVAL

⚠ CAUTION

Be careful when handling the projection at the tip of the speed sensor and the toothed edge of the ABS rotor so as not to damage them by contacting other parts.

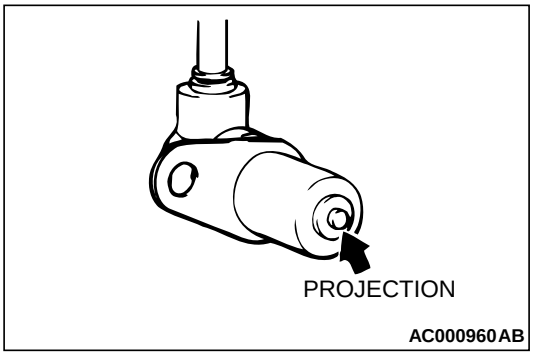

TSB Revision

INSTALLATION SERVICE POINT

>>A<< FRONT SPEED SENSOR/REAR SPEED SENSOR INSTALLATION

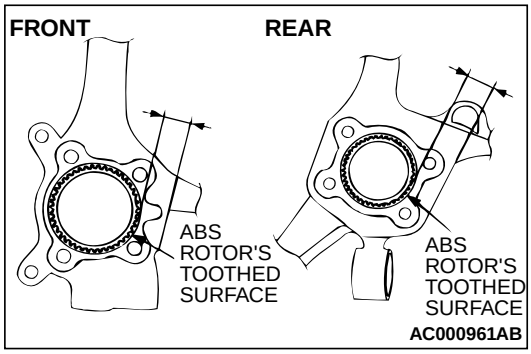

The clearance between the wheel speed sensor and the ABS rotor's toothed surface is not adjustable, but measure the distance between the sensor installation surface and the ABS rotor's toothed surface.

Standard value: 28.2 – 28.5 mm (1.11 – 1.12 inches)

INSPECTION

M1352008400222

SPEED SENSOR CHECK

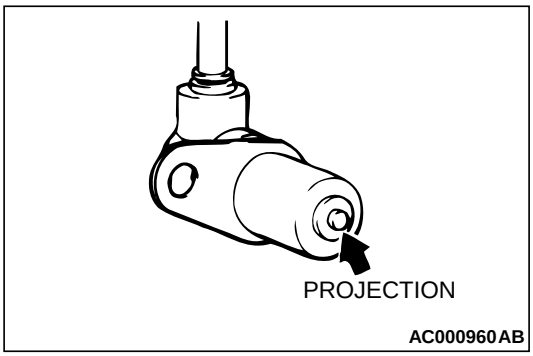

1. Check whether any metallic foreign material has adhered to the projection at the speed sensor tip. Remove any foreign material. Also check whether the pole piece is damaged. Replace it with a new one if it is damaged.

   NOTE: The projection can become magnetized due to the magnet inside the speed sensor, causing foreign material to easily adhere to it. The projection may not be able to correctly sense the wheel rotation speed if foreign matter is on it or if it is damaged.

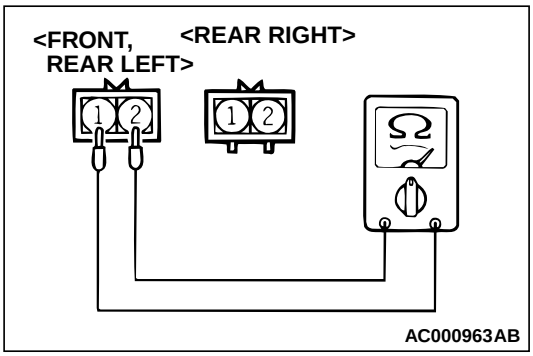

2. Measure the resistance between the speed sensor terminals.

   Standard value: 1.28 – 1.92 kΩ

3. If the internal resistance of the speed sensor is not within the standard value, replace it with a new speed sensor.

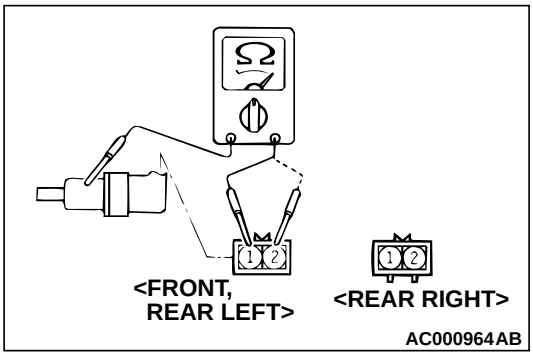

4. Remove all connections from the speed sensor. The circuit should be open between terminals (1) and (2) and the body of the speed sensor. If the circuit is not open, replace with a new speed sensor.
5. Check the speed sensor cable for breakage, damage or disconnection. Replace with a new one if a problem is found.

   NOTE: When checking for cable damage, remove the cable clamp part from the body and then gently bend and pull the cable near the clamp.

TOOTHED ABS ROTOR CHECK

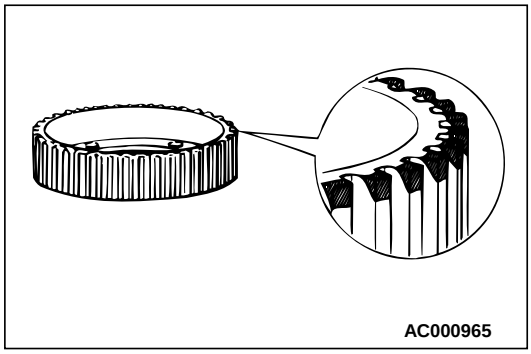

Check whether the ABS rotor teeth are broken or deformed. Replace the driveshaft assembly for the front side, or the ABS rotor for the rear side, respectively, if the teeth are damaged or deformed.

SPECIFICATIONS

FASTENER TIGHTENING SPECIFICATIONS

M1352012400203

ITEMS	SPECIFICATIONS
Brake tube flare nut	15 ± 2 N·m (11 ± 1 ft-lb)
Hydraulic unit bracket bolt	30 ± 5 N·m (22 ± 4 ft-lb)

SERVICE SPECIFICATIONS

M1352000300287

ITEMS	STANDARD VALUE
Wheel speed sensor internal resistance kΩ	1.28 – 1.92
Distance between wheel speed sensor installation surface and ABS rotor tooth top mm (in)	28.2 – 28.5 (1.11 – 1.12)

NOTES